PHIL-05778

Mini System

MCM9/22/25

Service
Service
Service

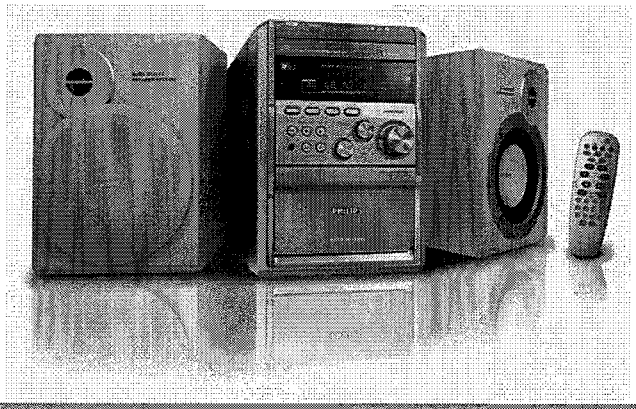

Service Manual

TABLE OF CONTENTS

	Page
Location of PC Boards & Versions Variation	1-2
Specifications	1-3
Measurement Setup	1-4
Service Aids, Safety Instruction, etc	1-5 to 1-7
Preparations & Controls	1-8 to 1-9
Troubleshooting	1-10
Disassembly Instructions & Service positions	2
Service Test Program	3-1
Set Block Diagram	4-1
Set Wiring Diagram	5-1
Front Board	6
ECO Tuner Part : Systems Cenelec	7B
Main Board	8
ETF8 Tape Module	9
CD-MP3-WMA 5250 Module	10
Combi & Regulator Board	11
Mechanical Exploded View & Parts List	12

CLASS 1
LASER PRODUCT

© Copyright 2005 Philips Consumer Electronics B.V. Eindhoven, The Netherlands
All rights reserved. No part of this publication may be reproduced, stored in a retrieval system or transmitted, in any form or by any means, electronic, mechanical, photocopying, or otherwise without the prior permission of Philips.

Published by SL0521 Service Audio Printed in The Netherlands Subject to modification.

GB 3141 785 30210

Version 1.0

PHILIPS

LOCATION OF PC BOARDS

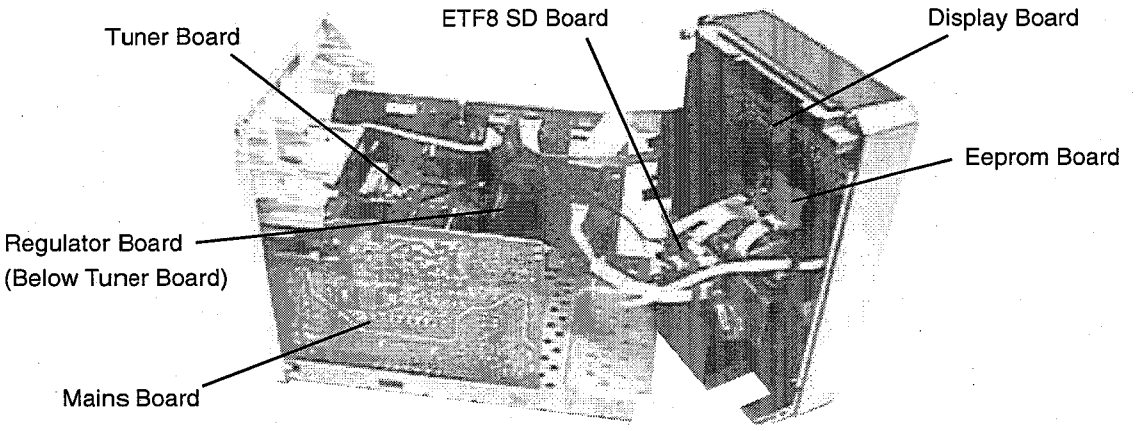

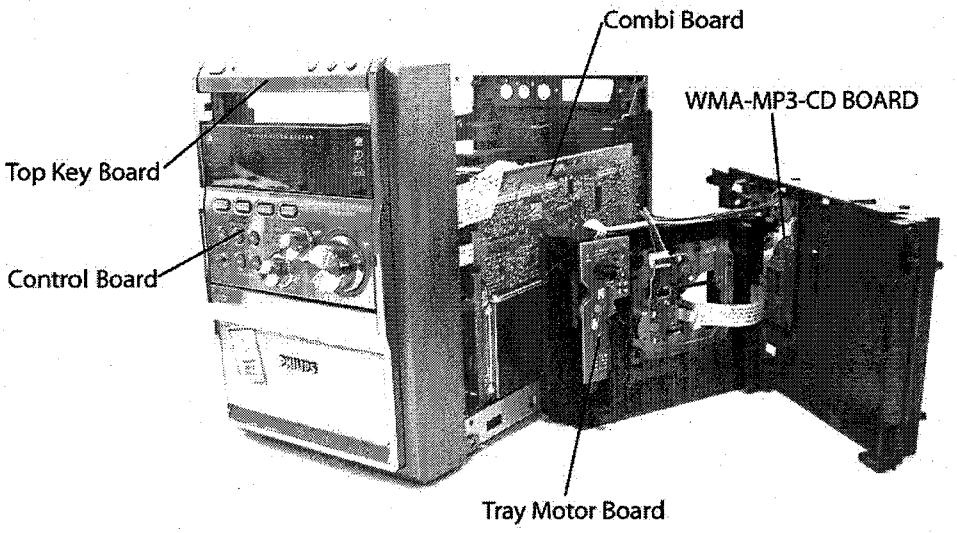

VERSION VARIATIONS:

Type /Versions: / Features & Board in used:	MCM9									
	/22	/25								
Aux in / CDR in	x	x								
Line Out										
Video Out										
Surround Out										
Subwoofer Out										
Digital Out										
Digital in										
Matrix Surround										
RDS/NEWS	x	x								
Dolby Pro Logic (DPL)										
Incredible Surround	x	x								
Karaoke Features										
Voltage Selector										
ECO Power Standby (Clock Display Off)	x	x								
ECO6 Tuner Board - Systems Non-Cenelec										
ECO6 Tuner Board - Systems Cenelec	x	x								

SPECIFICATIONS

GENERAL:

Mains voltage	: 220-230V for /22/25
Power consumption	: 80W at 1/8 P_{rated}
	< 15W at Standby (Demo mode off)
	< 0.5W at ECO Standby
Clock accuracy	: < 4 seconds per day
Dimension centre unit	: 175 x 252 x 350mm

TUNER:

FM

Tuning range	: 87.5-108MHz
Grid	: 50kHz
IF frequency	: 10.7MHz ± 25kHz
Aerial input	: 75 Ω coaxial
Sensitivity at 26dB S/N	: < 7µV
Selectivity at 600kHz bandwidth	: > 25dB
Image rejection	: > 25dB [> 75dB]
Distortion at RF=1mV, dev. 75kHz	: < 3%
-3dB Limiting point	: < 8µV
Crosstalk at RF=1mV, dev. 40kHz	: > 18dB

MW

Tuning range	: 531-1602kHz
Grid	: 9kHz
IF frequency	: 450kHz ± 1kHz
Aerial input	: Frame aerial
Sensitivity at 26dB S/N	: < 4.4mV/M
Selectivity at 18kHz bandwidth	: > 18dB
IF rejection	: > 45dB
Image rejection	: > 28dB
Distortion at RF=50mV, M=80%	: < 5%

AMPLIFIER:

Output power (6 Ω, 1kHz, 10% THD)

L & R	: 2 x 50W RMS
Frequency response within -3dB	: 50Hz-16kHz
Bass	: 60Hz ± 3 Steps
Treble	: 12kHz ± 3 Steps
Incredible Surround	: On / Off
Input sensitivity	
Aux in (at 1kHz)	: 500mV at 600 Ω
CDR in (at 1kHz)	: 1000mV at 600 Ω
Output sensitivity	
Headphone output at 32 ohm	: 15mW±2dB (Max. vol.)
CD Headphone output at 32 ohm	: 5mW ± 2dB (Max. vol.)

CASSETTE RECORDER:

Number of track	: 2 tracks (stereo)
Tape speed	: 4.76 cm/sec ± 2%
Wow and flutter	: < 0.4% DIN
Fast-wind/Rewind time C60	: 130 sec
Bias system	: 78kHz ± 10kHz
Rec/Pb frequency response within 8dB	: 80Hz - 10kHz
Signal to Noise Ratio (Type I)	: > 48dBA
Signal to Noise Ratio (Type II)	: > 52dBA

COMPACT DISC:

Measurement done directly at the connector on the board.

Output Resistance	: < 100 Ω
Output Voltage (0dB, 1kHz)	: 0.5Vrms ± 1dB (unloaded)
Channel Unbalance	: < ±1dB
Channel Separation (1kHz)	: > 60dB
Frequency Response (3dB)	: 20Hz-20kHz
Signal to Noise Ratio	: > 76dBA
MP3-CD Bit Rate	: 32-256 kbps
Sampling Frequencies	: 32, 44.1, 48 kHz

[....] Values indicated are for "ECO6 Cenelec Board" only.

MEASUREMENT SETUP

Tuner FM

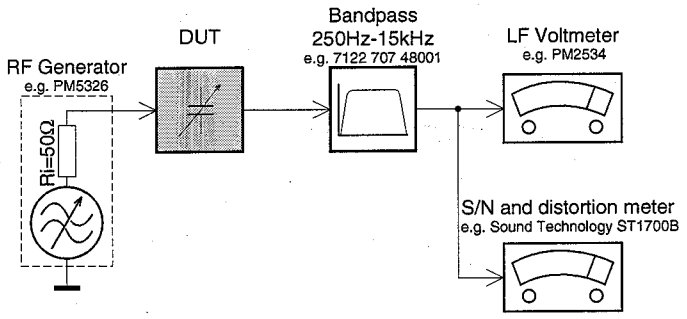

Use a bandpass filter to eliminate hum (50Hz, 100Hz) and disturbance from the pilottone (19kHz, 38kHz).

Tuner AM (MW,LW)

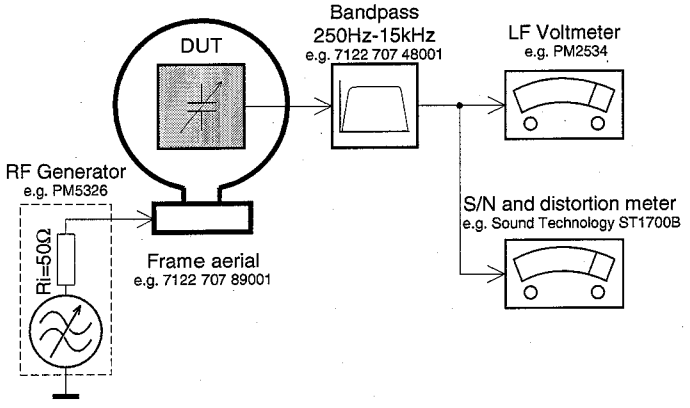

To avoid atmospheric interference all AM-measurements have to be carried out in a Faraday´s cage.
Use a bandpass filter (or at least a high pass filter with 250Hz) to eliminate hum (50Hz, 100Hz).

CD

Use Audio Signal Disc SBC429 4822 397 30184
(replaces test disc 3)

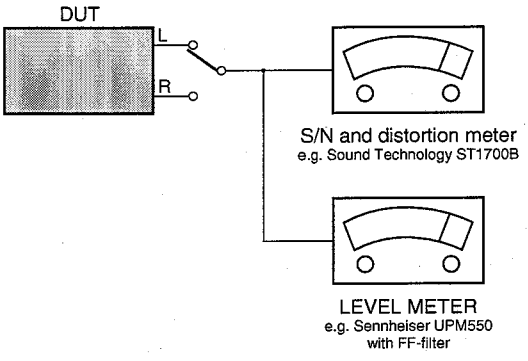

Recorder

Use Universal Test Cassette **CrO2** SBC419 4822 397 30069
or Universal Test Cassette **Fe** SBC420 4822 397 30071

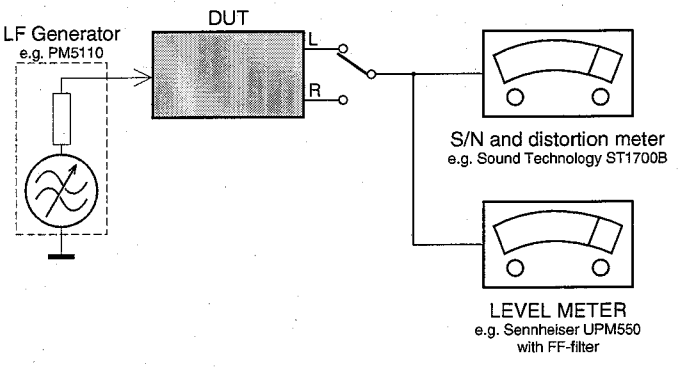

SERVICE AIDS

Service Tools:

Universal Torx driver holder 4822 395 91019
Torx bit T10 150mm 4822 395 50456
Torx driver set T6 - T20 ..... 4822 395 50145
Torx driver T10 extended 4822 395 50423

Compact Disc:

SBC426/426A Test disc 5 + 5A 4822 397 30096
SBC442 Audio Burn-in Test disc 1kHz 4822 397 30155
SBC429 Audio Signals disc 4822 397 30184
Dolby Pro-logic Test Disc 4822 395 10216

HANDLING CHIP COMPONENTS

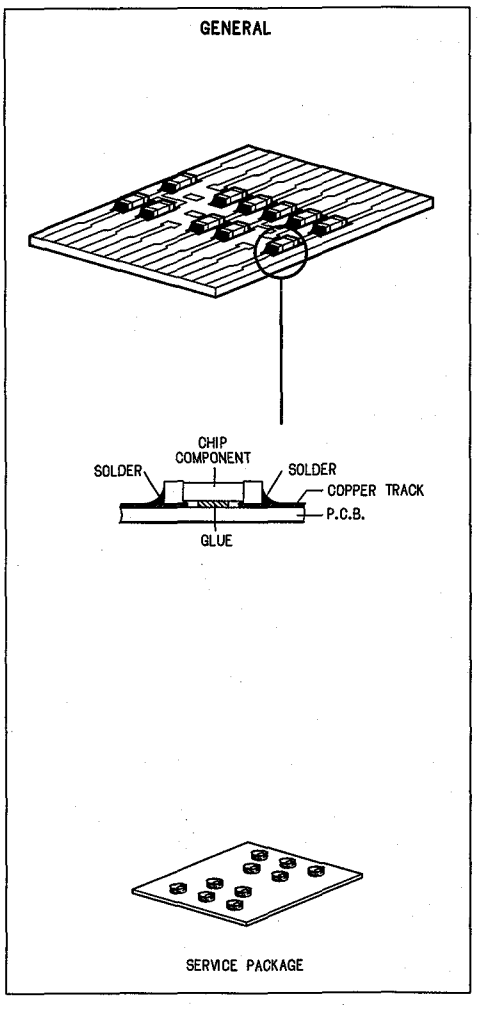

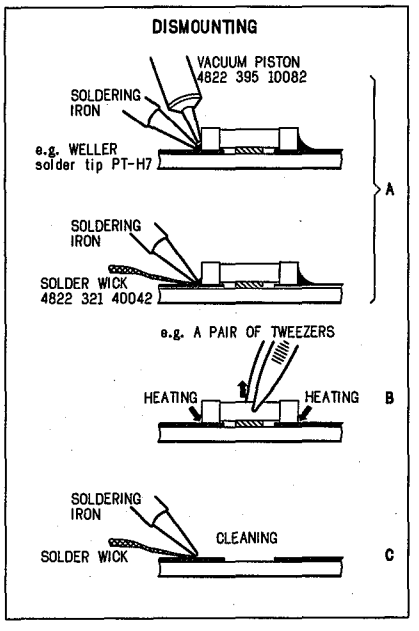

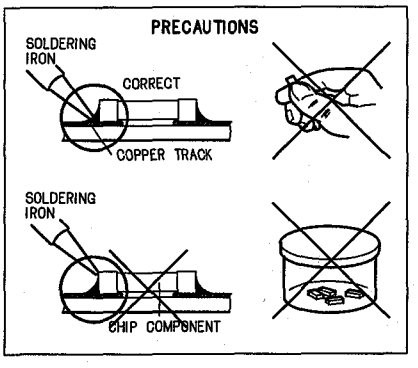

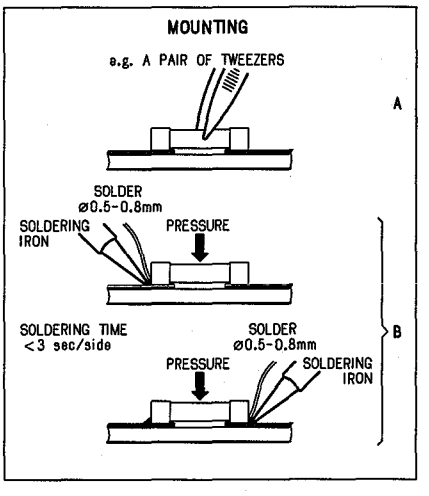

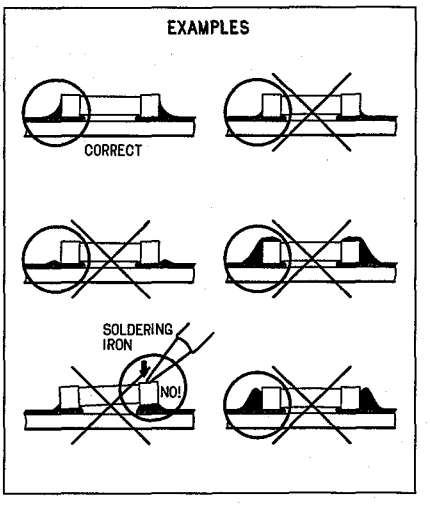

ESD

(GB) WARNING

All ICs and many other semi-conductors are susceptible to electrostatic discharges (ESD). Careless handling during repair can reduce life drastically.
When repairing, make sure that you are connected with the same potential as the mass of the set via a wrist wrap with resistance.
Keep components and tools also at this potential.

(NL) WAARSCHUWING

Alle IC's en vele andere halfgeleiders zijn gevoelig voor electrostatische ontladingen (ESD). Onzorgvuldig behandelen tijdens reparatie kan de levensduur drastisch doen verminderen.
Zorg ervoor dat u tijdens reparatie via een polsband met weerstand verbonden bent met hetzelfde potentiaal als de massa van het apparaat.
Houd componenten en hulpmiddelen ook op ditzelfde potentiaal.

(F) ATTENTION

Tous les IC et beaucoup d'autres semi-conducteurs sont sensibles aux décharges statiques (ESD).
Leur longévité pourrait être considérablement écourtée par le fait qu'aucune précaution n'est prise à leur manipulation.
Lors de réparations, s'assurer de bien être relié au même potentiel que la masse de l'appareil et enfiler le bracelet serti d'une résistance de sécurité.
Veiller à ce que les composants ainsi que les outils que l'on utilise soient également à ce potentiel.

(D) WARNUNG

Alle ICs und viele andere Halbleiter sind empfindlich gegenüber elektrostatischen Entladungen (ESD).
Unsorgfältige Behandlung im Reparaturfall kan die Lebensdauer drastisch reduzieren.
Veranlassen Sie, dass Sie im Reparaturfall über ein Pulsarmband mit Widerstand verbunden sind mit dem gleichen Potential wie die Masse des Gerätes.
Bauteile und Hilfsmittel auch auf dieses gleiche Potential halten.

(I) AVVERTIMENTO

Tutti IC e parecchi semi-conduttori sono sensibili alle scariche statiche (ESD).
La loro longevità potrebbe essere fortemente ridatta in caso di non osservazione della più grande cauzione alla loro manipolazione.
Durante le riparazioni occorre quindi essere collegato allo stesso potenziale che quello della massa dell'apparecchio tramite un braccialetto a resistenza.
Assicurarsi che i componenti e anche gli utensili con quali si lavora siano anche a questo potenziale.

(GB) ESD PROTECTION EQUIPMENT:

Complete Kit ESD3 (small tablemat, wristband, connection box, extention cable and earth cable) 4822 310 10671
Wristband tester 4822 344 13999

(GB)
Safety regulations require that the set be restored to its original condition and that parts which are identical with those specified, be used

Safety components are marked by the symbol ⚠.

(NL)
Veiligheidsbepalingen vereisen, dat het apparaat bij reparatie in zijn oorspronkelijke toestand wordt teruggebracht en dat onderdelen, identiek aan de gespecificeerde, worden toegepast.

De Veiligheidsonderdelen zijn aangeduid met het symbool ⚠

(F)
Les normes de sécurité exigent que l'appareil soit remis à l'état d'origine et que soient utiliséés les piéces de rechange identiques à celles spécifiées.

Less composants de sécurité sont marqués ⚠

(D)
Bei jeder Reparatur sind die geltenden Sicherheitsvorschriften zu beachten. Der Original zustand des Geräts darf nicht verändert werden; für Reparaturen sind Original-Ersatzteile zu verwenden.

Sicherheitsbauteile sind durch das Symbol ⚠ markiert.

(I)
Le norme di sicurezza esigono che l'apparecchio venga rimesso nelle condizioni originali e che siano utilizzati i pezzi di ricambio identici a quelli specificati.

Componenty di sicurezza sono marcati con ⚠

(GB)
After servicing and before returning set to customer perform a leakage current measurement test from all exposed metal parts to earth ground to assure no shock hazard exist. The leakage current must not exceed 0.5mA.

CLASS 1
LASER PRODUCT

(GB) Warning !

Invisible laser radiation when open.
Avoid direct exposure to beam.

(S) Varning !

Osynlig laserstrålning när apparaten är öppnad och spärren är urkopplad. Betrakta ej strålen.

(SF) Varoitus !

Avatussa laitteessa ja suojalukituksen ohitettaessa olet alttiina näkymättömälle laserisäteilylle. Älä katso säteeseen!

(DK) Advarse !

Usynlig laserstråling ved åbning når sikkerhedsafbrydere er ude af funktion. Undgå udsaettelse for stråling.

(F)
"Pour votre sécurité, ces documents doivent être utilisés par des spécialistes agréés, seuls habilités à réparer votre appareil en panne".

INFORMATION ABOUT LEAD-FREE SOLDERING

Philips CE is producing lead-free sets from 1.1.2005 onwards.
IDENTIFICATION:

Regardless of special logo (not always indicated) one must treat all sets from 1 Jan 2005 onwards, according next rules:

Example S/N:

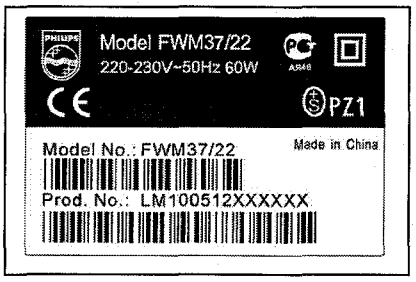

Bottom line of typeplate gives a 14-digit S/N. Digit 5&6 is the year, digit 7&8 is the week number, so in this case 2005 wk12

So from 0501 onwards = from 1 Jan 2005 onwards

***Important note**: In fact also products of year 2004 must be treated in this way as long as you avoid mixing solder-alloys (leaded/ lead-free). So best to always use SAC305 and the higher temperatures belong to this.*

Due to lead-free technology some rules have to be respected by the workshop during a repair:

- Use only lead-free solder alloy Philips SAC305 with order code 0622 149 00106. If lead-free solder-paste is required, please contact the manufacturer of your solder-equipment. In general use of solder-paste within workshops should be avoided because paste is not easy to store and to handle.

- Use only adequate solder tools applicable for lead-free solder alloy. The solder tool must be able
  - To reach at least a solder-temperature of 400°C,
  - To stabilize the adjusted temperature at the solder-tip
  - To exchange solder-tips for different applications.
- Adjust your solder tool so that a temperature around 360°C – 380°C is reached and stabilized at the solder joint. Heating-time of the solder-joint should not exceed ~ 4 sec. Avoid temperatures above 400°C otherwise wear-out of tips will rise drastically and flux-fluid will be destroyed. To avoid wear-out of tips switch off un-used equipment, or reduce heat.
- Mix of lead-free solder alloy / parts with leaded solder alloy / parts is possible but PHILIPS recommends strongly to avoid mixed solder alloy types (leaded and lead-free).
  If one cannot avoid or does not know whether product is lead-free, clean carefully the solder-joint from old solder alloy and re-solder with new solder alloy (SAC305).
- Use only original spare-parts listed in the Service-Manuals. Not listed standard-material (commodities) has to be purchased at external companies.
- Special information for BGA-ICs:
  - always use the 12nc-recognizable soldering temperature profile of the specific BGA (for de-soldering always use the lead-free temperature profile, in case of doubt)
  - lead free BGA-ICs will be delivered in so-called 'dry-packaging' (sealed pack including a silica gel pack) to protect the IC against moisture. After opening, dependent of MSL-level seen on indicator-label in the bag, the BGA-IC possibly still has to be baked dry. (MSL=Moisture Sensitivity Level). This will be communicated via AYS-website.
  Do not re-use BGAs at all.

- For sets produced before 1.1.2005 (except products of 2004), containing leaded solder-alloy and components, all needed spare-parts will be available till the end of the service-period. For repair of such sets nothing changes.

- On our website **www.atyourservice.ce.Philips.com** you find more information to:

  * BGA-de-/soldering (+ baking instructions)
  * Heating-profiles of BGAs and other ICs used in Philips-sets

  You will find this and more technical information within the "magazine", chapter "workshop news".

For additional questions please contact your local repair-helpdesk.

SERVICE INSTRUCTION

Safety regulations require that after a repair, the set must be returned in its original condition. Pay in particular attention to the following points:

- Route the wire trees correctly and fix them with the mounted cable clamps.
- Check the insulation of the AC Power lead for external damage.
- Check the strain relief of the AC Power cord for proper function.
- Check the electrical DC resistance between the AC Power Plug and the secondary side (only for sets which have a AC Power isolated power supply):

1. Unplug the AC Power cord and connect a wire between the two pins of the AC Power plug.
2. Set the AC Power switch to the "on" position (keep the AC Power cord unplugged!).
3. Measure the resistance value between the pins of the AC Power plug and the metal shielding of the tuner or the aerial connection on the set. The reading should be larger than 4.5 Mohm (For U.S. it should be between 4.2 Mohm and 12 Mohm).
4. Switch "off" the set, and remove the wire between the two pins of the AC Power plug.

- Check the cabinet for defects, to avoid touching of any inner parts by the customer.

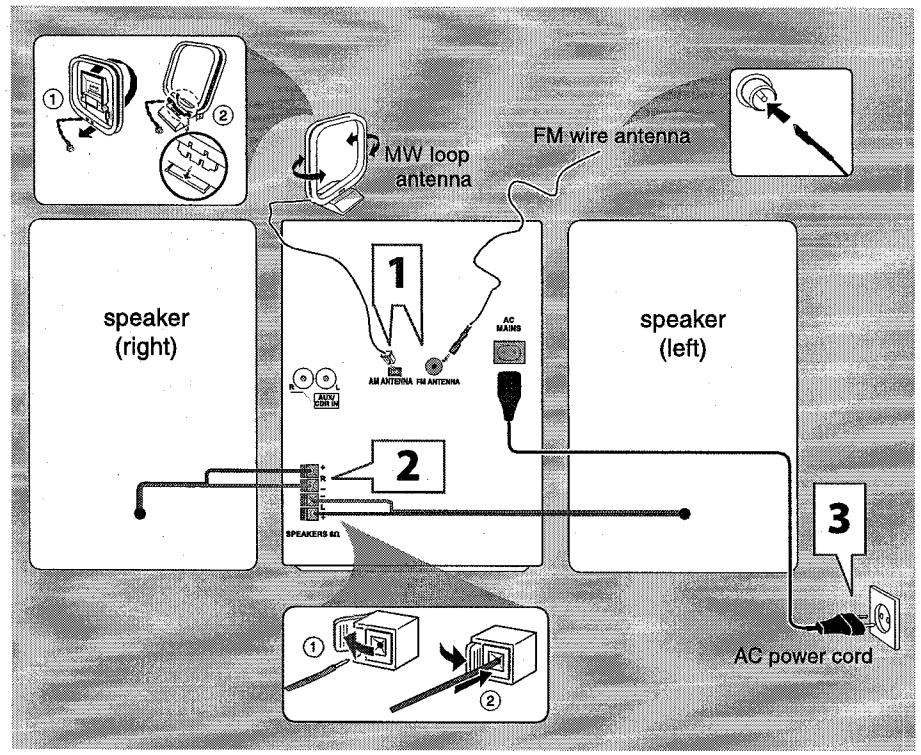

WARNING!
– Use only the supplied speakers.
The combination of the main unit and speakers provide the best sound.
Using other speakers can damage the unit and sound quality will be negatively affected.
– Never make or change connections with the power switched on.
– Connect the AC power cord to the power outlet only after you have finished hooking up everything.

Step 1: Connecting FM/MW antennas

– Place the MW loop antenna on a shelf or attach it to a stand or wall.
– Extend the FM antenna and fix its ends to the wall.
– Adjust the position of the antennas for optimal reception.
– Position the antennas as far as possible from a TV, VCR or other radiation source to prevent unwanted noise.
– For better FM stereo reception, connect external FM antenna.

Connections

Step 2: Connecting the speakers

Connect the speaker wires to the SPEAKERS terminals, right speaker to "R" and left speaker to "L", coloured (marked) wire to "+" and black (unmarked) wire to "–". Fully insert the stripped portion of the speaker wire into the terminal as shown.

Helpful Hint:
– Ensure that the speaker cables are correctly connected. Improper connections may damage the system due to short-circuit.
– Do not connect more than one speaker to any one pair of + / – speaker terminals.

Step 3: Connecting the AC power cord

"AUTO INSTALL – PRESS PLAY" may appear on the display panel when the AC power cord is plugged into the power outlet for the first time. Press ▶II on the main unit to store all available radio stations or press ■ to exit (refer to "Tuner Operations").

Step 4: Inserting batteries into the remote control

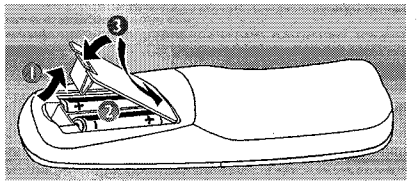

1 Open the battery compartment cover.
2 Insert two batteries type R06 or AA, following the indications (+ –) inside the compartment.
3 Close the cover.

Using the remote control to operate the system

1 Aim the remote control directly at the remote sensor (iR) on the main unit.
2 Select the source you wish to control by pressing one of the source select keys on the remote control (for example CD, TUNER).
3 Then select the desired function (for example ▶II, I◀, ▶I).

CAUTION!
– Remove batteries if they are exhausted or will not be used for a long time.
– Do not use old and new or different types of batteries in combination.
– Batteries contain chemical substances, so they should be disposed of properly.

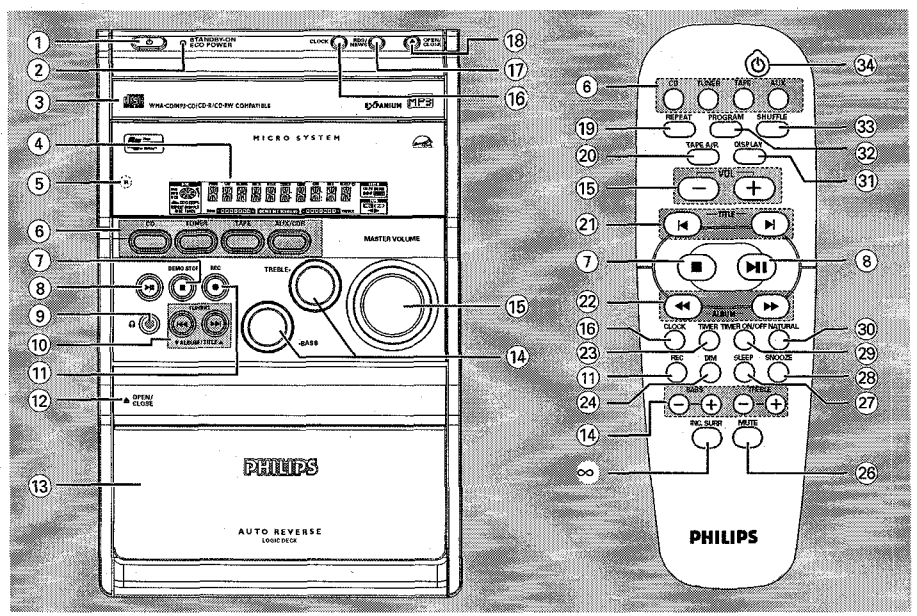

Main unit and remote control

① **STANDBY ON ⏻**
- Switches to Eco Power standby mode or turns on the system.
- *Switches to standby mode.

② **ECO POWER indicator**
- Lights up when the system is in Eco Power standby mode.

③ **Disc tray**

④ **Display screen**

⑤ **iR**
- Point the remote control towards this sensor.

⑥ **CD / TUNER / TAPE /AUX/CDR**
- Selects the relevant active mode.
- CD: switches to CD mode.
- TUNER: toggles between FM and MW band.
- TAPE: switches to Tape mode.
- AUX/CDR: toggles between AUX and CDR mode.

⑦ **DEMO STOP ■**
- Exits an operation.
- CD: stops playback or clears a programme.
- TUNER: *erases a preset radio station.
- TAPE: stops playback or recording.

(only on the main unit)
- *Turns on/off the demonstration mode.

⑧ **►II**
- CD: starts/pauses playback.
- TAPE: starts playback or selects other side of the tape during playback.
- CLOCK: toggles between hour and minutes setting.

(only on the main unit)
- TUNER: *enters Plug & Play mode and/or starts preset radio station installation.

⑨ **🎧**
- Plug in the headphones jack. The speakers output will be cancelled.

** = Press and hold the button for more than two seconds.*

Functional Overview

⑩ **TUNING |◄◄ ►►| (▼ALBUM/TITLE▲)**
- CD: *searches backward/forward or selects a track.
- MP3/WMA: *selects an album or selects a title (track).
- TUNER: tunes the radio frequency up/down.
- TAPE: rewind or fast forward.
- CLOCK: sets the hours or minutes.

⑪ **REC**
- *starts recording on a tape.

⑫ **OPEN/CLOSE**
- Opens/closes the tape deck door.

⑬ **Tape deck**

⑭ **BASS/TREBLE (+ −)**
- Selects a desired BASS (low tone) or TREBLE (high tone) level.

⑮ **MASTER VOLUME (VOL + −)**
- Adjusts the volume level.

⑯ **CLOCK**
- Switches to clock display mode or enter clock setting mode.

⑰ **RDS/NEWS**
- In tuner mode, selects RDS information.
- In other modes, turns on/off news.

⑱ **OPEN/CLOSE ▲**
- Opens/closes the disc tray.

Control buttons available on the remote only

⑲ **REPEAT**
- Repeats a track/disc/all programmed tracks.

⑳ **TAPE A/R**
- Selects the desired tape playback modes : one side, both sides or auto replay.

㉑ **|◄ ►|**
- MP3/WMA: selects an MP3/WMA title (track).
- CD: selects a track.
- TUNER: selects a preset radio station.
- TAPE: selects other side of the tape.

㉒ **◄◄ ►►**
- MP3WMA: selects an album from MP3/WMA disc.
- CD: searches backward/forward.
- TUNER: tunes the radio frequency up/down.
- TAPE: rewind or fast forward.
- CLOCK: sets the hours or minutes.

㉓ **TIMER**
- Displays the timer setting or enter timer setting mode.

㉔ **DIM**
- Selects different levels of brightness for display panel.

∞ **INC. SURR.**
- Turns on/off the incredible surround sound effect.

㉖ **MUTE**
- Mutes or restores the volume.

SLEEP
- Sets the sleep timer function.

㉘ **SNOOZE**
- Temporarily deactivate the wake up timer.

㉙ **TIMER ON/OFF**
- Turns on/off timer function.

㉚ **NATURAL**
- Selects flat sound effect.

㉛ **DISPLAY**
- Displays the album and title name for MP3/WMA disc.

PROGRAM
- CD: starts or confirms tracks programming.
- TUNER: starts *automatic/manual preset programming.
- CLOCK: selects 12- or 24-hour clock display.

㉝ **SHUFFLE**
- Turns on/off random play mode.

㉞ **⏻**
- Switches to Eco Power standby mode.
- *Switches to standby mode.

** = Press and hold the button for more than two seconds.*

Troubleshooting

WARNING
Under no circumstances should you try to repair the system yourself, as this will invalidate the warranty. Do not open the system as there is a risk of electric shock.

If a fault occurs, first check the points listed below before taking the system for repair. If you are unable to remedy a problem by following these hints, consult your dealer or Philips for help.

Problem	Solution
Radio reception is poor.	✔ If the signal is too weak, adjust the antenna or connect an external antenna for better reception. ✔ Increase the distance between the system and your TV or VCR.
"NO DISC" is displayed or the disc cannot be played.	✔ Insert a disc. ✔ Load in the disc with label facing up. ✔ Replace or clean the disc, see "Care and safety information". ✔ Use a finalised CD-R(W) or a correct format disc.
The system does not react when buttons are pressed.	✔ Remove and reconnect the AC power cord and switch on the system again.
Recording or playback cannot be made.	✔ Use only NORMAL (IEC I) tape. ✔ Apply a piece of adhesive tape over the missing tab space.
The tape deck door cannot open.	✔ Remove and reconnect the AC power plug and switch on the system again.
Sound cannot be heard or is of poor quality.	✔ Adjust the volume. ✔ Disconnect the headphones. ✔ Check that the speakers are connected correctly. ✔ Check that the AC power cord is connected properly.
The remote control does not function properly.	✔ Select the source (CD or TUNER, for example) before pressing the function button (▶II, ⏮ ⏭). ✔ Reduce the distance between the remote control and the system. ✔ Replace the battery. ✔ Point the remote control directly toward the IR sensor.
The timer is not working.	✔ Set the clock correctly. ✔ Press TIMER ON/OFF to switch on the timer. ✔ If recording is in progress, stop the recording.
The system displays features automatically and buttons start flashing.	✔ Press and hold DEMO STOP on the main unit to switch off the demonstration mode.

DISMANTLING INSTRUCTIONS

Dismantling of the Cover Cassette and Universal Loader

1) Remove the Cover Cassette (pos 150) in the direction as shown in Figure 1.
2) Loosen 4 screws to remove the Cover Top (pos 240) by sliding it out towards the rear before lifting up.
   - 2 screws on the rear
   - 1 screw each on the left & right side
3) Loosen 2 screws each to remove the Panel Left (pos 180) and Panel Right (pos 181). The Panels are removed by sliding it towards the rear and outwards.
   - 1 screw on the rear
   - 1 screw on the side
   - see Service position A
4) Use a screw driver to give a push in the direction as shown in Figure 2 and Figure 2A to unlock the Loader Tray before sliding it out.
5) Slide out the Loader Tray and remove the Cover CD (pos 110 + pos 111) in the direction as shown in Figure 3.
6) Loosen 4 screws A (see Figure 4) to remove the Bracket Module Mounting (pos 156) and Universal Loader (pos 1103).
   - 2 screws each on the left & right side

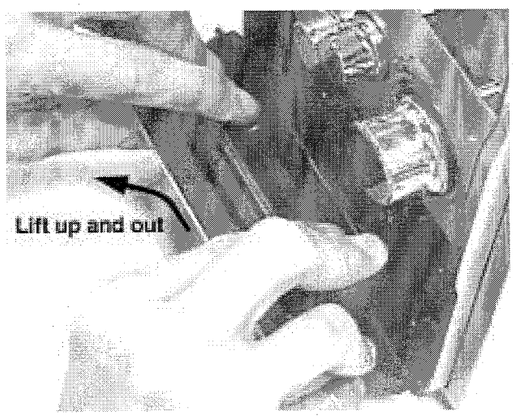

Figure 1

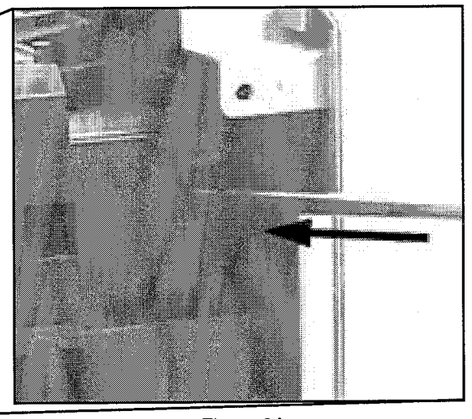

Figure 2A

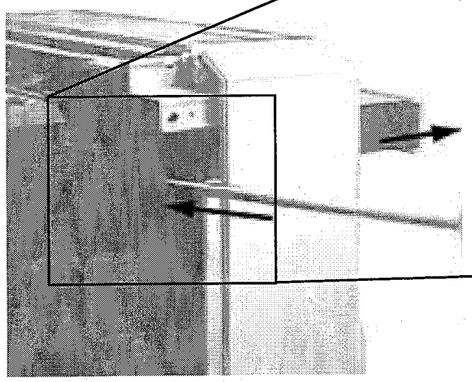

Figure 2

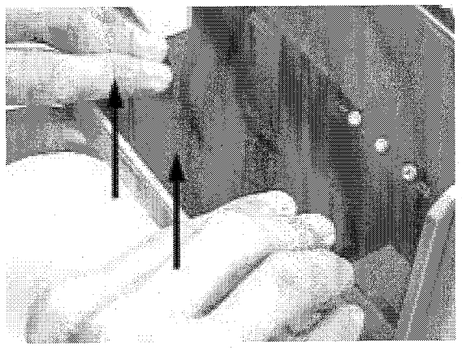

Figure 3

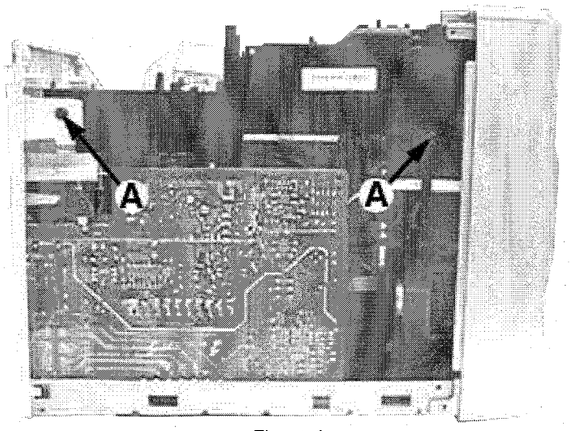

Figure 4

Detaching the Universal Loader from the Bracket Module Mounting

1) Slide out the Loader Tray fully and remove 4 screws B (see Figure 5) to detach the Universal Loader (pos 1103) from the Bracket Module Mounting (pos 156).
   - see Service position B

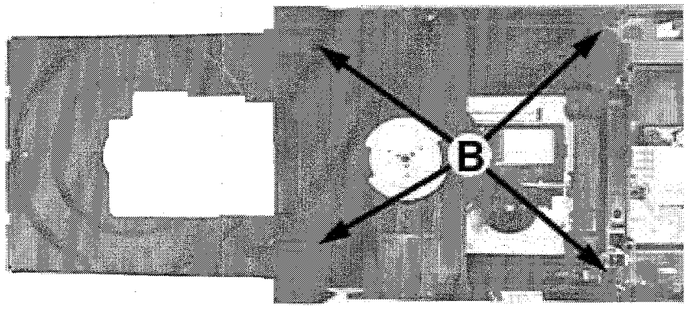

Figure 5

Detaching the Front Panel assembly from the Bottom/Rear assembly

1) Remove 2 screws C (see Figure 6) from the bottom of the Cabinet Front (pos 101).

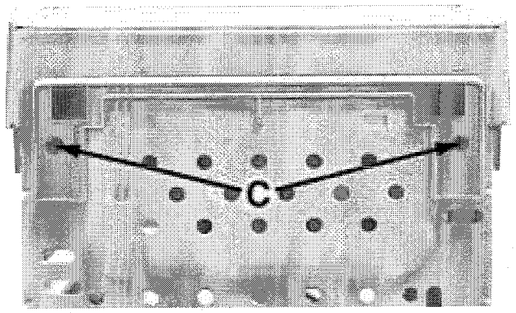

Figure 6

2) Release the fixation of the Combi Board (pos1102-1003) to Bracket Combi (pos 155) by releasing the 2 catches C1 (see Figure 7) and pulling the Combi Board outwards as shown in Figure 7A.
3) Uncatch 2 catches C2 (see Figure 7) on the left & right sides of the Cabinet Front (pos 101) and slides the Front Panel assembly out towards the front.
   - see Service position C

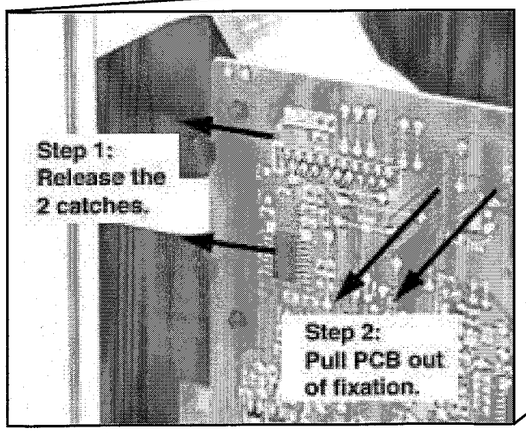

Figure 7A

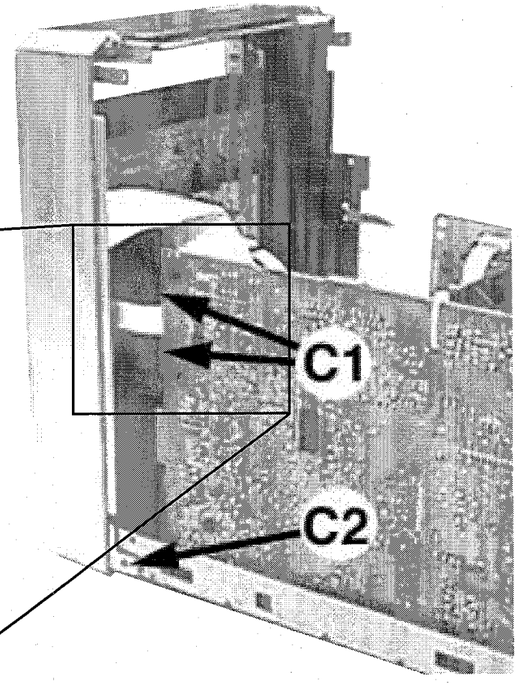

Figure 7

DISMANTLING INSTRUCTIONS

Dismantling of the Front Panel assembly

1) The Knob Volume (pos 141) can be remove by pulling it out in the direction as shown in Figure 8.
2) The Knob Bass/Knob Treble (pos 140) can be remove by pulling it out in the direction as shown in Figure 9.
3) Loosen 4 screws D (see Figure 12) to remove the Shield Tape Deck and Module Tape Deck (pos 1107).
4) Loosen 2 screws E (see Figure 11) to remove the Bracket Top Support (pos 113).
5) Loosen 1 screw F and 4 catches C3 (see Figure 11) to remove the Eeprom Board (pos 1105D).
6) Loosen 4 screws G (see Figure 11) to remove the Bracket Combi (pos 155).
7) Uncatch 4 catches C4 (see Figure 13) to remove the Display Board (pos 1105A)
8) Loosen 4 screws H (see Figure 13) to remove the Top Key Board (pos 1105C).
9) Loosen 5 screws J (see Figure 14) and 2 nuts W (see Figure 10) to remove the Control Board (pos 1105B).

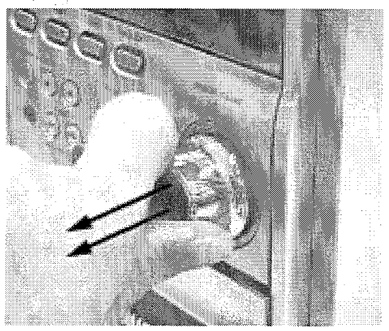

Figure 8

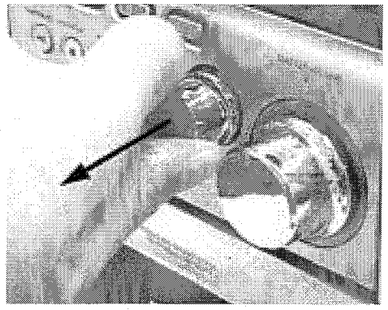

Figure 9

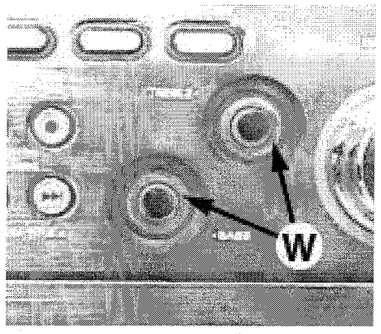

Figure 10

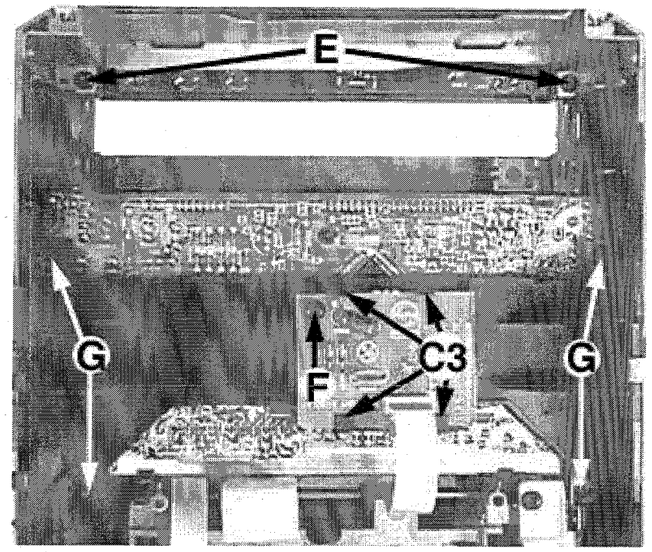

Figure 11

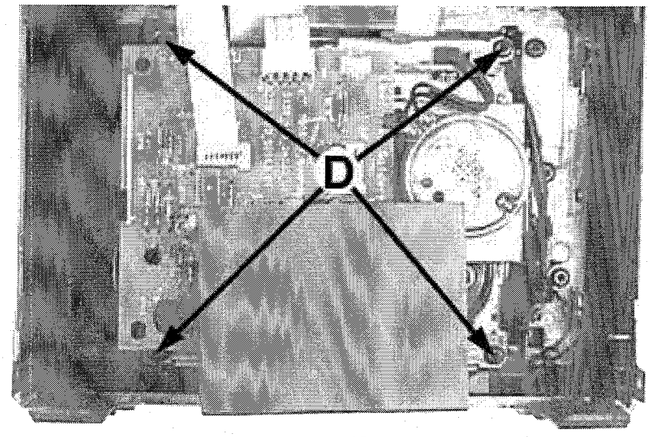

Figure 12

Dismantling of the Front Panel assembly

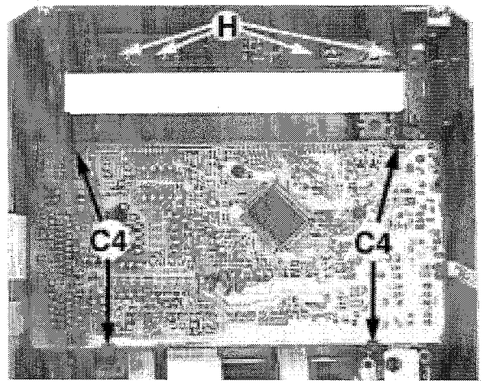

Figure 13

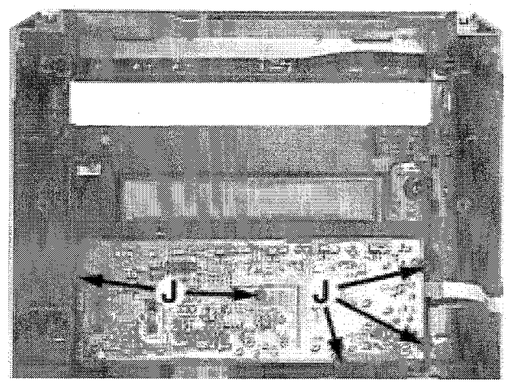

Figure 14

Dismantling of the Rear Panel assembly

1) Loosen 3 screws K and 2 catches C5 (see Figure 15) to remove the Tuner Board assembly.
2) Loosen 3 screws L (see Figure 15) to free the Combi Board (pos 1102-1003).
3) Loosen 1 screw M (see Figure 15) to free the Mains Socket Board (pos 1102-1001B).
4) Loosen 1 scew N and 2 catches C6 (see Figure 15) to free the Panel Rear (pos 230) by sliding it out towards the rear.

Note : Tuner Board assembly and Mains Socket Board can also be remove together with the Panel Rear.

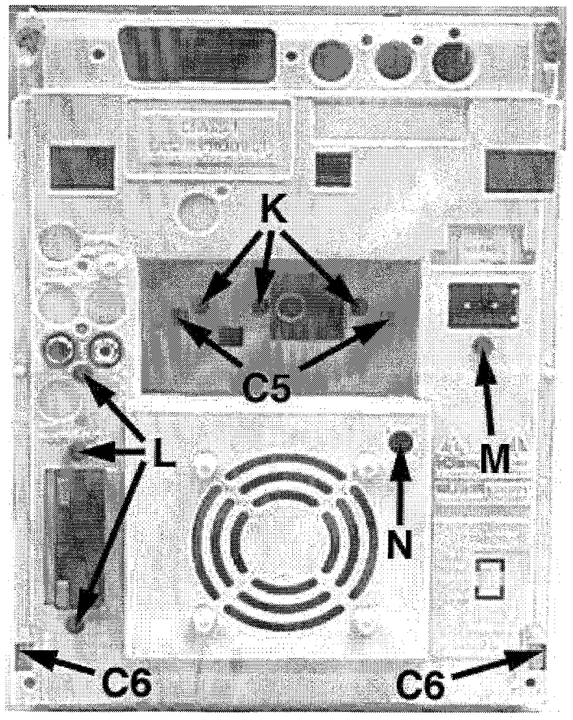

Figure 15

DISMANTLING INSTRUCTIONS

Repair Hints & Service Positions

1) During repair it is possible to disconnect the Tuner Board and/or CD Module completely unless the fault is suspected to be in that area. This will not affect the performance of the rest of the set.

Note: The flex cables are very fragile, care should be taken not to damage them during repair. After repair, be very sure that the flex cables are inserted properly into the flex sockets before encasing, otherwise faults may occurs.

Service position A

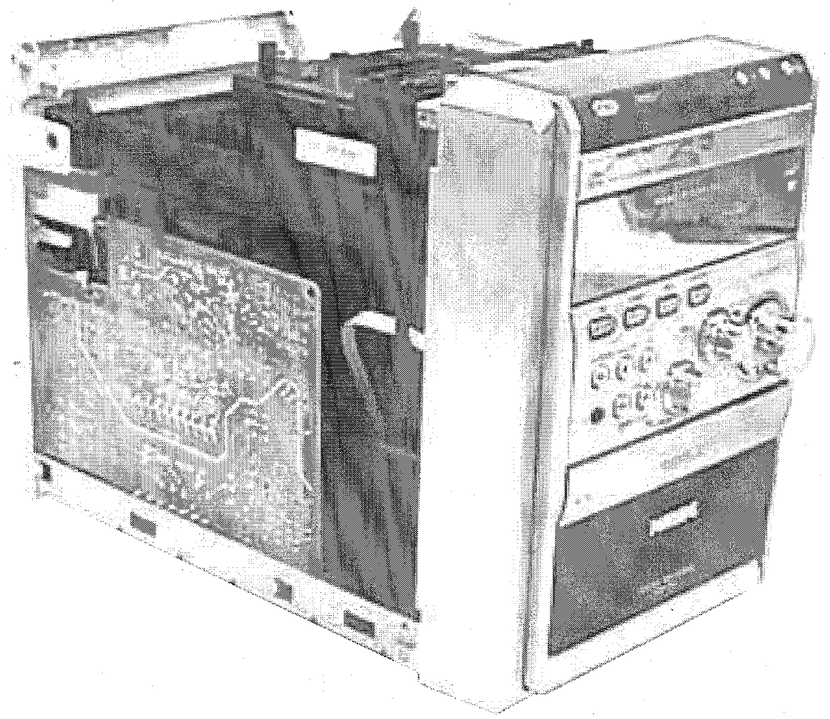

Service position B

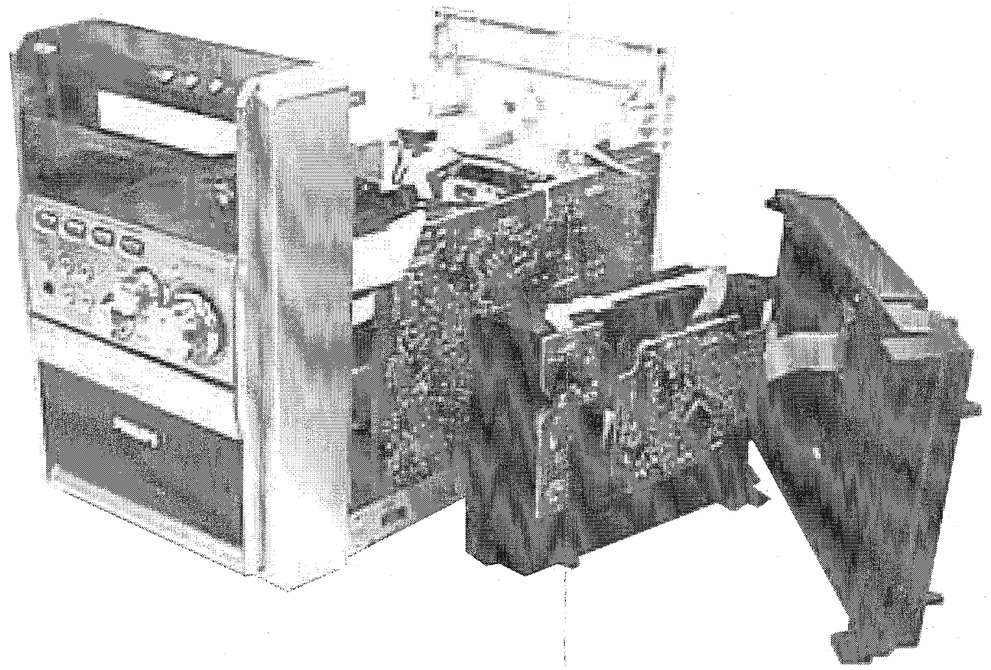

Service position C

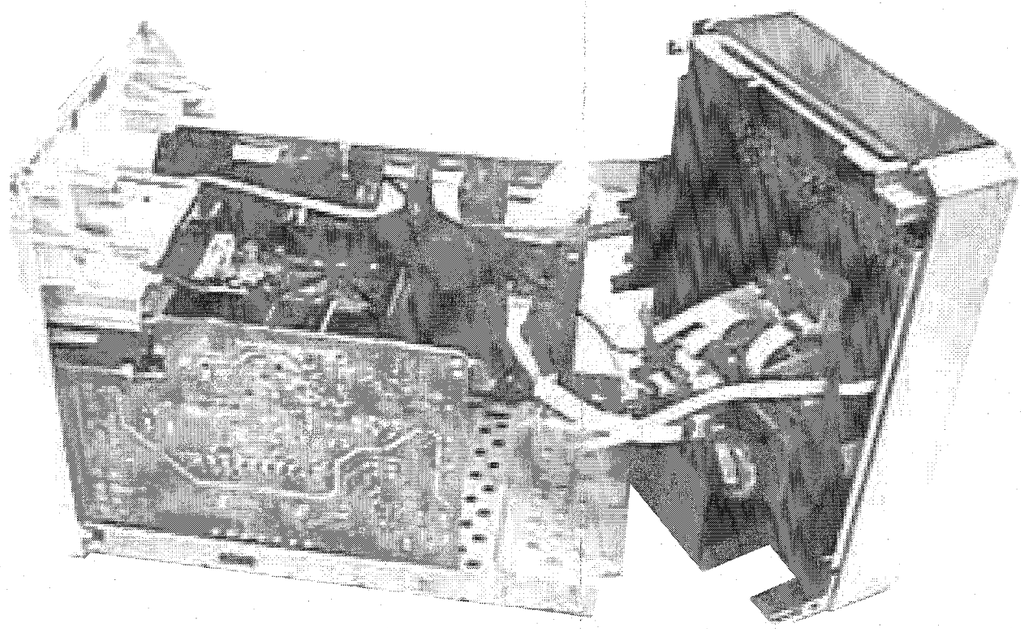

3-1

SERVICE TEST PROGRAM

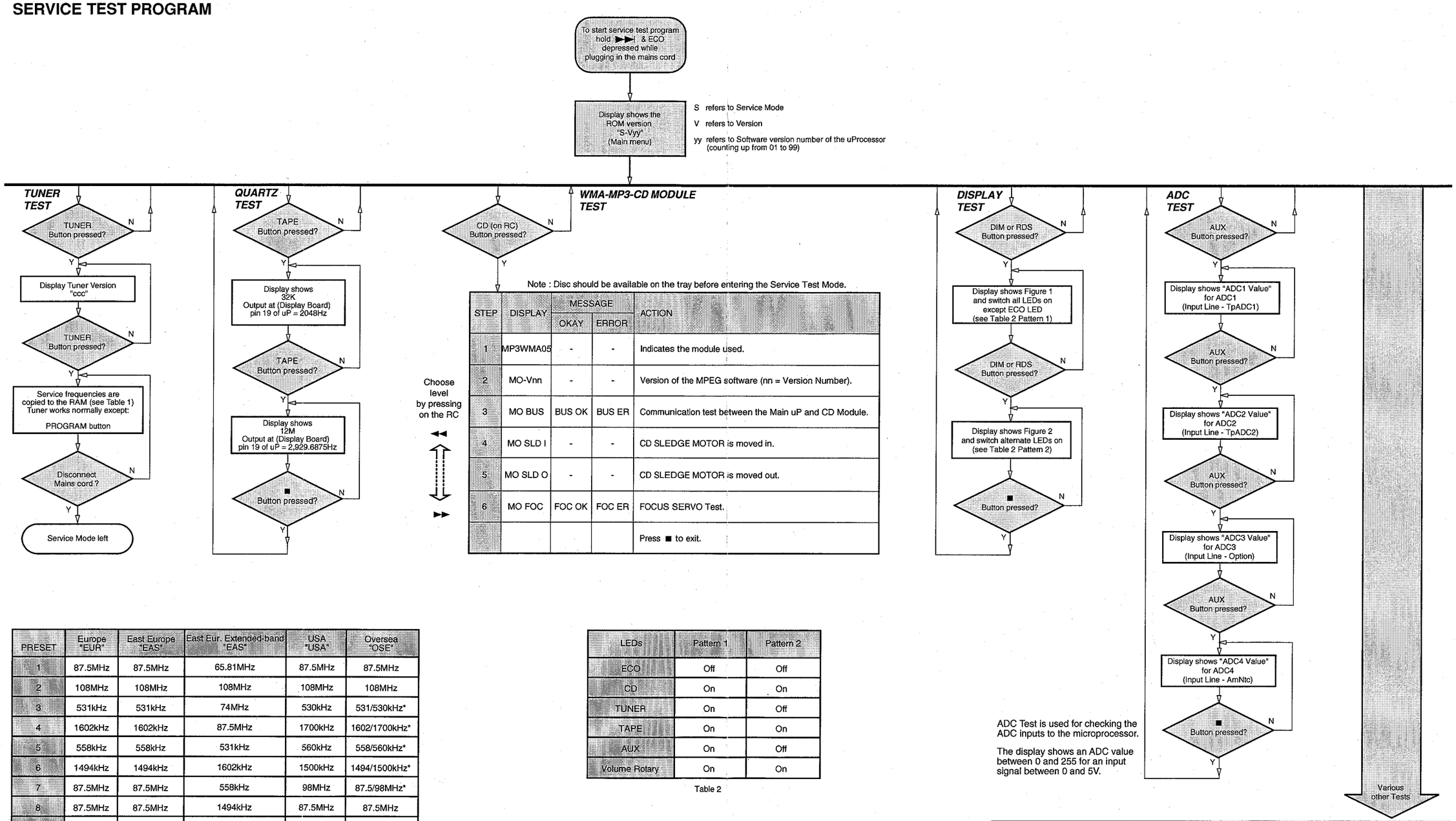

Note : Disc should be available on the tray before entering the Service Test Mode.

STEP	DISPLAY	MESSAGE OKAY	MESSAGE ERROR	ACTION
1	MP3WMA05	-	-	Indicates the module used.
2	MO-Vnn	-	-	Version of the MPEG software (nn = Version Number).
3	MO BUS	BUS OK	BUS ER	Communication test between the Main uP and CD Module.
4	MO SLD I	-	-	CD SLEDGE MOTOR is moved in.
5	MO SLD O	-	-	CD SLEDGE MOTOR is moved out.
6	MO FOC	FOC OK	FOC ER	FOCUS SERVO Test.
				Press ■ to exit.

ADC Test is used for checking the ADC inputs to the microprocessor.

The display shows an ADC value between 0 and 255 for an input signal between 0 and 5V.

PRESET	Europe "EUR"	East Europe "EAS"	East Eur. Extended-band "EAS"	USA "USA"	Oversea "OSE"
1	87.5MHz	87.5MHz	65.81MHz	87.5MHz	87.5MHz
2	108MHz	108MHz	108MHz	108MHz	108MHz
3	531kHz	531kHz	74MHz	530kHz	531/530kHz*
4	1602kHz	1602kHz	87.5MHz	1700kHz	1602/1700kHz*
5	558kHz	558kHz	531kHz	560kHz	558/560kHz*
6	1494kHz	1494kHz	1602kHz	1500kHz	1494/1500kHz*
7	87.5MHz	87.5MHz	558kHz	98MHz	87.5/98MHz*
8	87.5MHz	87.5MHz	1494kHz	87.5MHz	87.5MHz
9	87.5MHz	87.5MHz	98MHz	87.5MHz	87.5MHz
10	87.5MHz	87.5MHz	70.01MHz	87.5MHz	87.5MHz
11	98MHz	98MHz	65.81MHz	87.5MHz	98/87.5MHz*

Table 1

Note: * Depending on the selected grid frequency (9 or 10kHz).
By holding the ECO and TUNER buttons depressed while switching on the Mains supply, one of the undermentioned features will be activated:
- the tuning grid frequency is toggled between 9kHz and 10kHz for the Oversea (/21) version.
- the extended FM1 (65.81MHz - 74MHz) is toggled on and off for East Eur. (/34) version.

LEDs	Pattern 1	Pattern 2
ECO	Off	Off
CD	On	On
TUNER	On	Off
TAPE	On	On
AUX	On	Off
Volume Rotary	On	On

Table 2

Figure 1

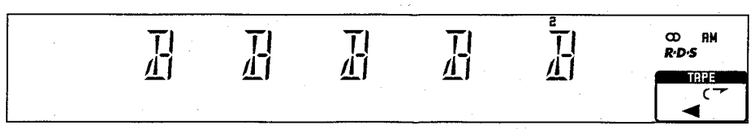

Figure 2

TEST	Activated with	ACTION
EEPROM TEST	►►I ■ to Exit	Test patterns will be sent to the EEPROM. "PASS" is displayed if the uProcessor read back the test patterns correctly, otherwise "FAIL" will be displayed.
EEPROM FORMAT TEST	I◄◄	Load default data. Display shows "NEW" for 1 second. ***Caution! All presets from the customer will be lost!!***
DEMO TOGGLE	►II	Pressing this button will toggle between DEMO ON and DEMO OFF. The DEMO status will scroll once across the Display.
ROTARY ENCODER TEST	Volume, Treble or Bass Knob	Display shows value for 2 seconds. Values increases or decreases until Volume Maximum (0dB) or Volume Minimum (VOL MUTE) is reached.
LEAVE SERVICE TEST PROGRAM	Disconnect mains cord	

4-1

SET BLOCK DIAGRAM

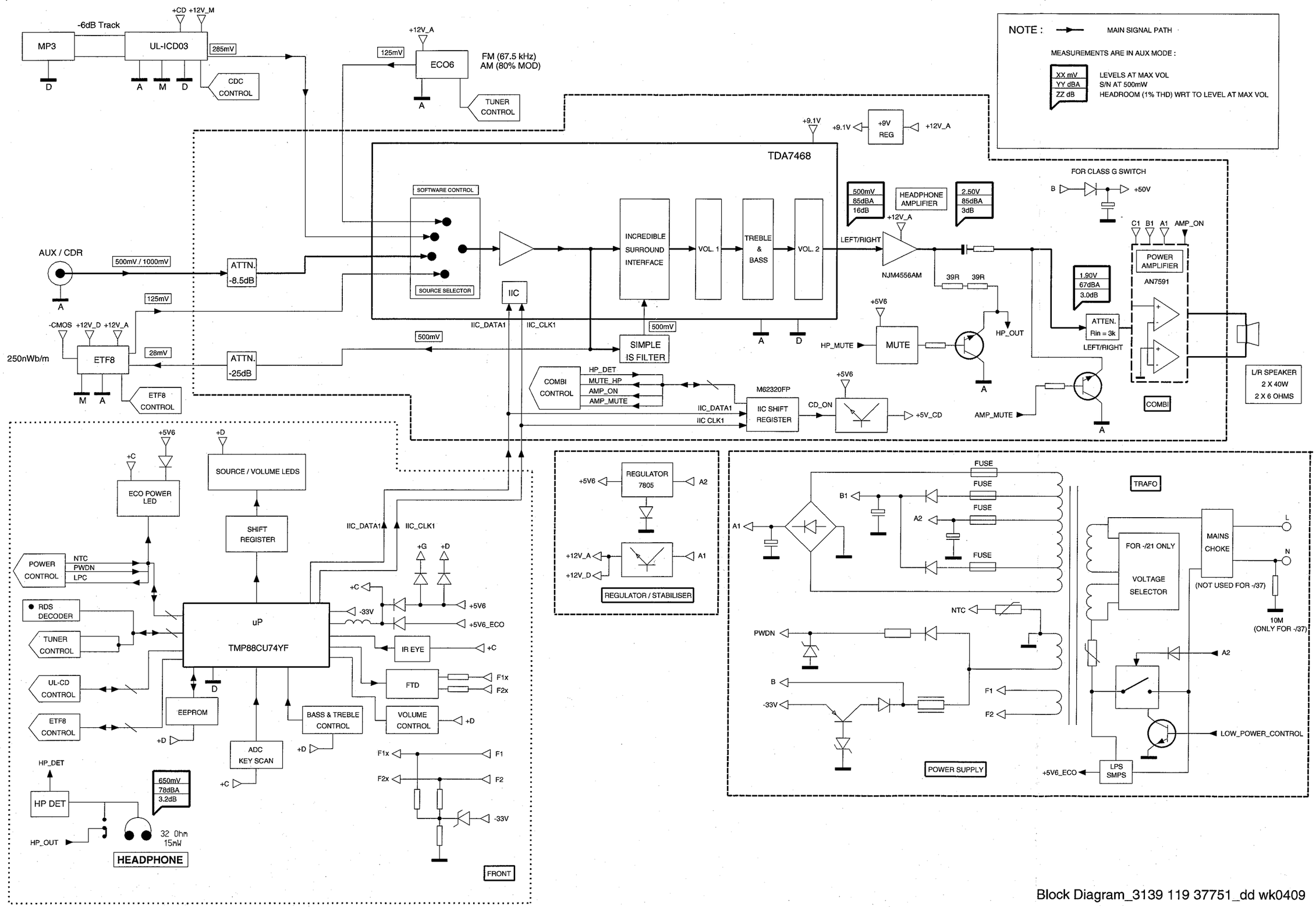

Block Diagram_3139 119 37751_dd wk0409

FRONT BOARD

TABLE OF CONTENTS

FTD Display Pin Connection 6-2
Display part - Component Layout 6-3
Display part - Chip Layout 6-4
Display part - Circuit Diagram Part 1 6-5
Display part - Circuit Diagram Part 2 6-6
Display part - Variant Table 6-7
Top Key part - Layout & Circuit diagram 6-7
Control part - Component & Chip Layout 6-8
Control part - Circuit Diagram Part 1 6-9
Control part - Circuit Diagram Part 2 6-10
Eeprom part - Layout & Circuit diagram 6-11
Karaoke part - Component & Chip Layout 6-12
Karaoke part - Circuit Diagram 6-13
Electrical parts list 6-14

TECHNICAL REMARKS

5-1

SET WIRING DIAGRAM

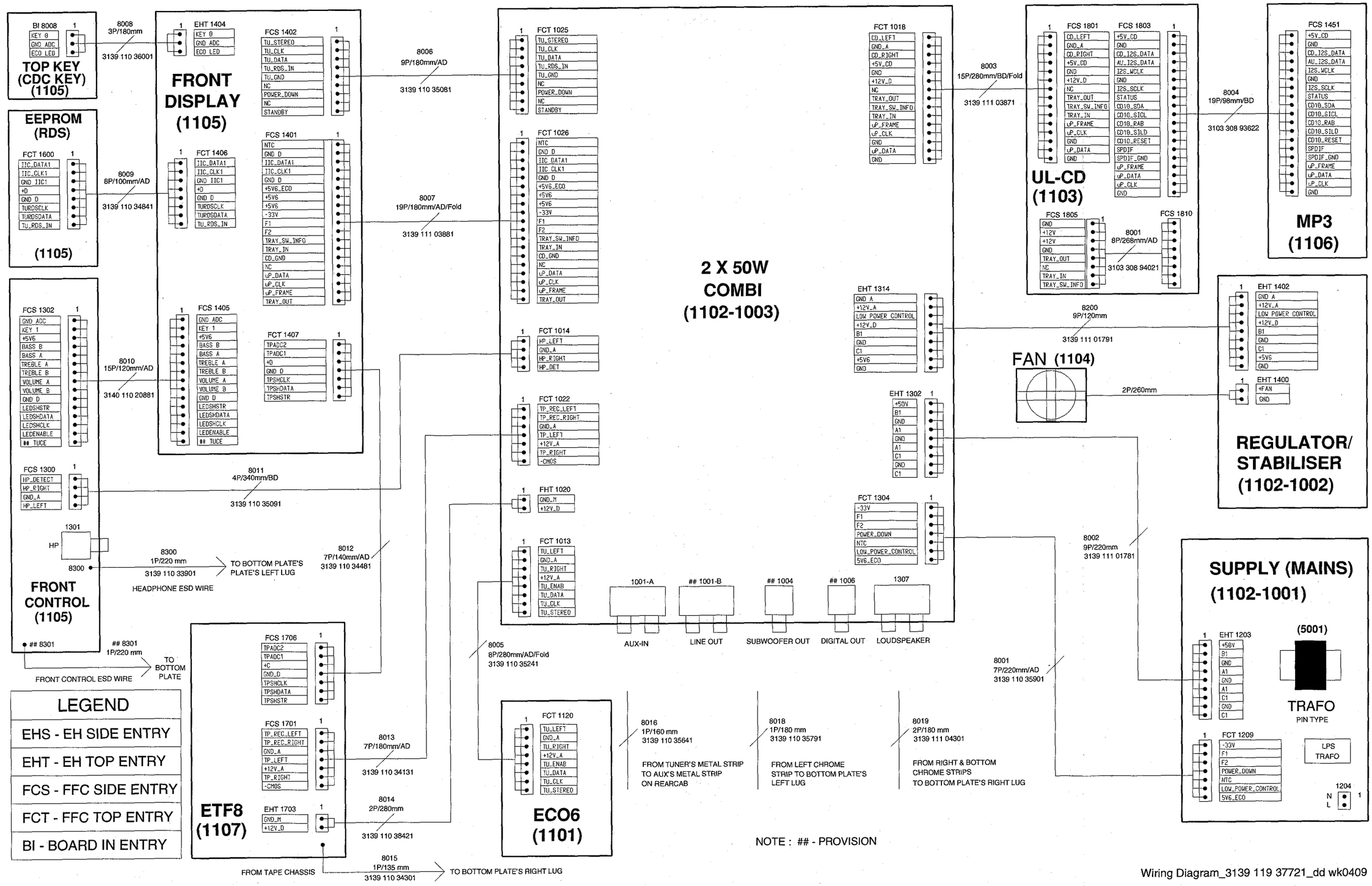

Wiring Diagram_3139 119 37721_dd wk0409

6-2

FTD DISPLAY PIN CONNECTION

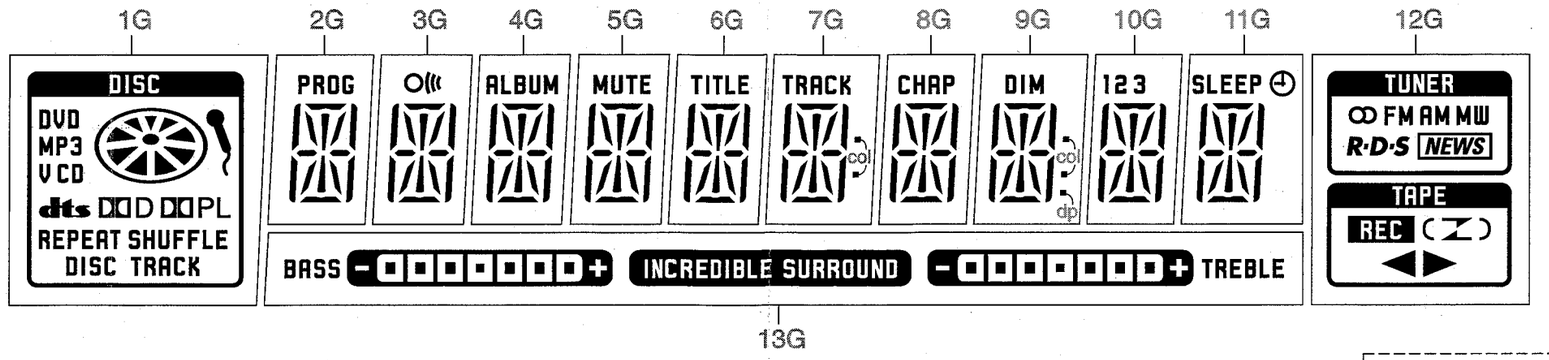

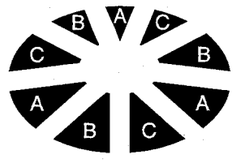

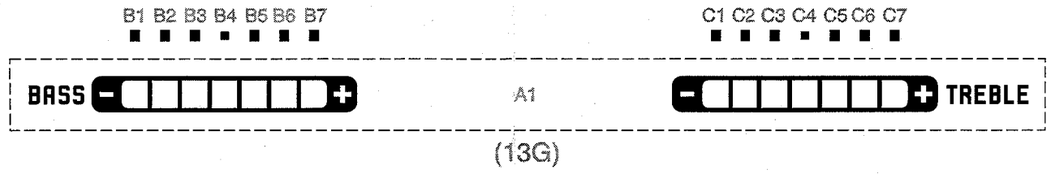

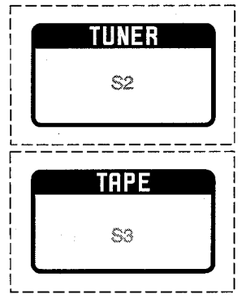

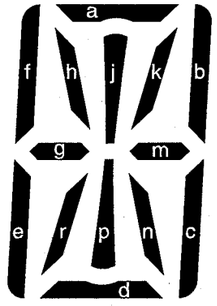

	1G	2G	3G	4G	5G	6G	7G	8G	9G	10G	11G	12G	13G
P1	S1	-	-	-	-	-	col	-	col	1	-	S2	INCREDIBLE SURROUND
P2	DVD	-	-	-	-	-	-	-	dp	2	SLEEP	∞	A1
P3	MP3	PROG	O(((	ALBUM	MUTE	TITLE	TRACK	CHAP	DIM	3	◷	FM	B1
P4	V	a	a	a	a	a	a	a	a	a	a	AM	B2
P5	CD	h	h	h	h	h	h	h	h	h	h	MW	B3
P6	dts	j, p	j, p	j, p	j, p	j, p	j, p	j, p	j, p	j, p	j, p	R·D·S	B4
P7	DD	k	k	k	k	k	k	k	k	k	k	NEWS	B5
P8	DPL	b	b	b	b	b	b	b	b	b	b	S3	B6
P9	REPEAT	f	f	f	f	f	f	f	f	f	f	REC	B7
P10	SHUFFLE	m	m	m	m	m	m	m	m	m	m	(	C1
P11	DISC	g	g	g	g	g	g	g	g	g	g	)	C2
P12	TRACK	c	c	c	c	c	c	c	c	c	c	↗	C3
P13	🎤	e	e	e	e	e	e	e	e	e	e	↙	C4
P14	⊙	r	r	r	r	r	r	r	r	r	r	◀	C5
P15	B	n	n	n	n	n	n	n	n	n	n	▶	C6
P16	A	d	d	d	d	d	d	d	d	d	d	-	C7
P17	C	-	-	-	-	-	-	-	-	-	-	-	-

6-3

DISPLAY BOARD - COMPONENT LAYOUT

1400	A4	2405	A5	2473	A1	3520	A1	5404	B5	6404	A5	9400	B6	9420	A2	9428	B1	9436	C2	9444	C4	9452	B5	9460	B5
1401	A6	2450	A2	3420	A6	3521	A6	5405	A5	6405	A2	9401	C2	9421	A3	9429	B1	9437	C2	9445	C4	9453	C6	9461	B6
1402	B6	2453	A2	3433	B2	3522	A6	5406	A5	6406	A2	9402	A3	9422	A2	9430	B1	9438	C3	9446	A5	9454	B5	9462	B6
1404	A1	2457	C2	3434	B1	3523	A6	5407	B1	6407	B2	9403	A4	9423	A2	9431	C1	9439	A4	9447	A5	9455	B5	9463	B6
1405	C5	2461	A1	3497	C3	3524	A6	6400	B1	6408	A1	9404	B6	9424	A2	9432	C1	9440	B3	9448	A6	9456	B5	9464	B6
1406	C3	2462	A1	3512	C6	3535	B2	6401	A5	6409	A6	9405	B5	9425	B1	9433	C1	9441	C3	9449	A5	9457	B5	9465	B6
1407	C6	2463	A6	3518	A6	5400	A4	6402	A5	6410	A6	9406	B2	9426	B2	9434	C1	9442	C3	9450	A5	9458	B5	9466	B5
2404	A4	2464	A6	3519	A1	5401	B4	6403	A5	7403	A1	9407	B1	9427	A2	9435	C1	9443	C4	9451	B5	9459	B5		

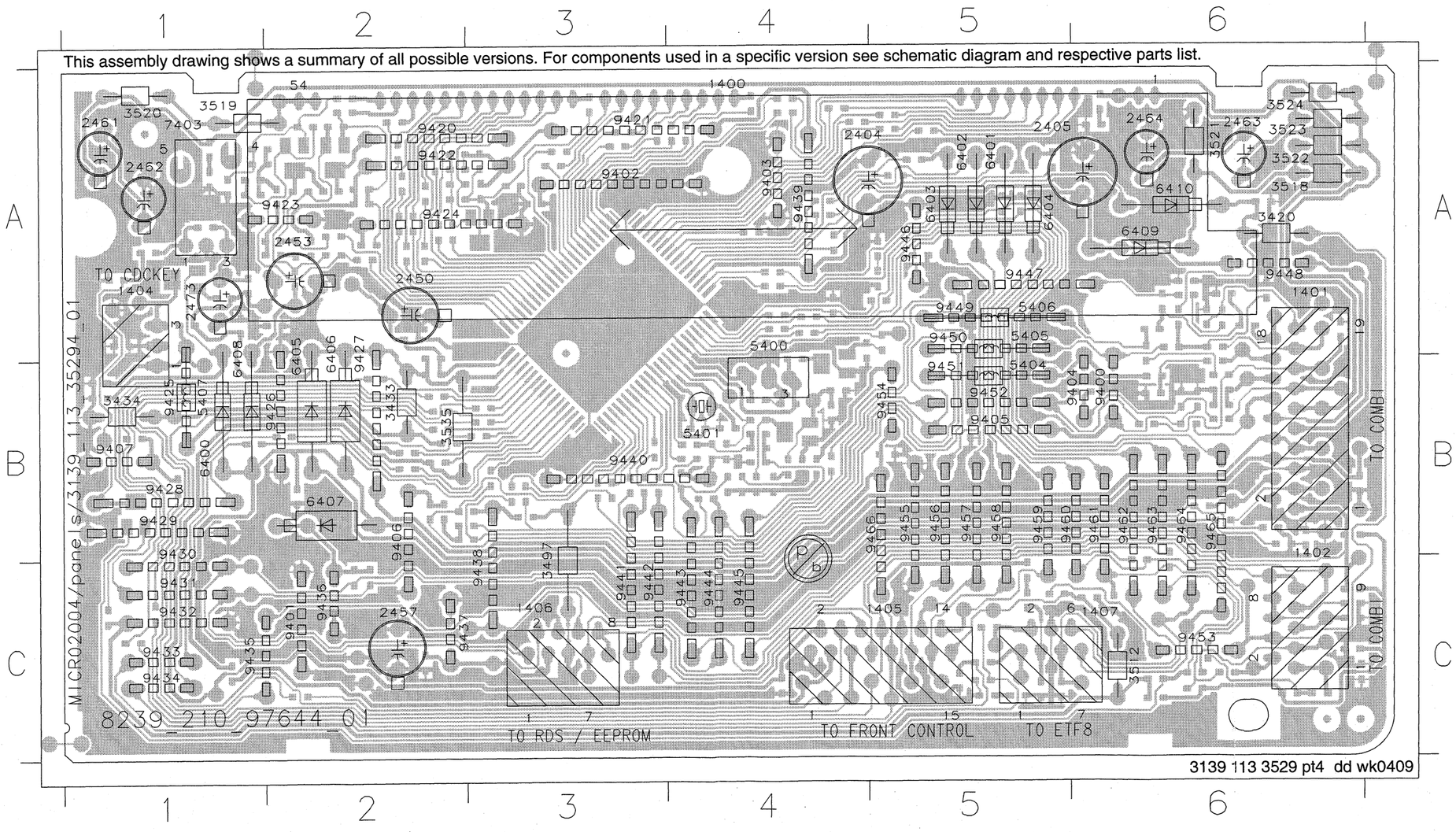

6-4

DISPLAY BOARD - CHIP LAYOUT

2400	C2	2423	C2	2459	C1	3402	A5	3422	A3	3443	B4	3462	B4	3481	A4	3501	B1	3529	A5
2401	B3	2424	C2	2460	C1	3403	B3	3423	A3	3444	B4	3463	B5	3482	A4	3502	B1	3531	A5
2402	B3	2425	A2	2465	A6	3404	B3	3424	A2	3445	B6	3464	B5	3483	A4	3503	B1	3532	A6
2403	B3	2426	A2	2466	A6	3405	B3	3425	A3	3446	B4	3465	A6	3484	A4	3504	B1	3533	A6
2406	B3	2440	B1	2467	A1	3406	B3	3426	A3	3447	B4	3466	A5	3485	A3	3505	B1	3534	A6
2407	A3	2441	B1	2468	A1	3407	A3	3427	A3	3448	B4	3467	A5	3486	A3	3506	A1	3536	C6
2408	B3	2442	B1	2469	A2	3408	A2	3428	A3	3449	B5	3468	A5	3487	A3	3507	A1	3537	B6
2409	B3	2443	B1	2470	C1	3409	A3	3429	B1	3450	B5	3469	A5	3488	A3	3508	B3	3538	B6
2410	B3	2444	B1	2471	A3	3410	A2	3430	C1	3451	B5	3470	A5	3489	A3	3509	C1	3539	A2
2411	B3	2445	A1	2472	C1	3411	A3	3431	A3	3452	B4	3471	A5	3490	A4	3510	C1	4400	B3
2412	B6	2446	B1	2474	A6	3412	A2	3432	A2	3453	B5	3472	A5	3491	A6	3511	C1	4401	A5
2413	A5	2447	A1	2476	A6	3413	A3	3435	B3	3454	B5	3473	A5	3492	A5	3513	C1	4402	A5
2414	A4	2448	A1	2477	A4	3414	A3	3436	B3	3455	B5	3474	A5	3493	A6	3514	C1	4403	A5
2415	A5	2449	B1	2478	A5	3415	A3	3437	B3	3456	B5	3475	A5	3494	C5	3515	C1	4404	C5
2416	A5	2451	A5	2479	A6	3416	A3	3438	B3	3457	B5	3476	A5	3495	C5	3516	C2	4405	A1
2417	A5	2452	B5	2480	C3	3417	A2	3439	B3	3458	B4	3477	A5	3496	A2	3517	B3	4406	B1
2418	A5	2454	A6	2481	A1	3418	A2	3440	B4	3459	B5	3478	A5	3498	C2	3525	A1	4407	B1
2419	A5	2456	B2	3400	A6	3419	A3	3441	B4	3460	B4	3479	A4	3499	C2	3526	A5	4408	A1
2420	A6	2458	C2	3401	B6	3421	A1	3442	B4	3461	B5	3480	A4	3500	B1	3527	A4	4409	A1

4410	B5	4431	A5	4451	C1	4470	A5	4489	A3	4508	A1	4527	A4	4546	A5	4565	A5	4584	A5
4411	A1	4432	A5	4452	A5	4471	A5	4490	A4	4509	A1	4528	A4	4547	A5	4566	A5	4585	A5
4412	A1	4433	A5	4453	A5	4472	A5	4491	A6	4510	A1	4529	A4	4548	A5	4567	A5	4586	A5
4413	A1	4434	A6	4454	C2	4473	A5	4492	A5	4511	A1	4530	A4	4549	A5	4568	A5	4587	A5
4415	C1	4436	C5	4455	B2	4474	A5	4493	A6	4512	A1	4531	A4	4550	A5	4569	A5	4588	A5
4416	B3	4437	C6	4456	C1	4475	A5	4494	C5	4513	A1	4532	A4	4551	A5	4570	A5	4589	A5
4417	C1	4438	B4	4457	B3	4476	A5	4495	C5	4514	A1	4533	A4	4552	A5	4571	A5	4590	A5
4418	B5	4439	A4	4458	C6	4477	A5	4496	A2	4515	A1	4534	A4	4553	A5	4572	A5	4591	A5
4419	B1	4440	A2	4459	B1	4478	A5	4498	C2	4516	A1	4535	A4	4554	A5	4573	A5	4592	A5
4420	C6	4441	A2	5402	B5	4479	A5	4499	C2	4517	A1	4536	A4	4555	A5	4574	A5	4593	A5
4421	B1	4442	A2	5403	A5	4480	A5	4500	C2	4518	A1	4537	A4	4556	A5	4575	A5	4594	A5
4422	B1	4443	A1	7400	A4	4481	A5	4501	C2	4519	A1	4538	A4	4557	A5	4576	A5	4595	A5
4423	A1	4444	B3	7401	A6	4482	A5	4502	C2	4520	A1	4539	A4	4558	A5	4577	A5	4596	A5
4424	A1	4445	B3	7402	B3	4483	A5	4503	C2	4521	A1	4540	A4	4559	A5	4578	A5	4597	A5
4425	A1	4446	B3	7404	B3	4484	A5	4504	C2	4522	A1	4541	A4	4560	A5	4579	A5	4598	A5
4426	A1	4447	C2	7405	A4	4485	A5	4505	C2	4523	A1	4542	A4	4561	A5	4580	A5	4599	A5
4427	B1	4448	C2	7406	B6	4486	A5	4506	C2	4524	A1	4543	A4	4562	A5	4581	A5	4600	A5
4428	A1	4449	C2	7407	A5	4487	A5	4507	C2	4525	A1	4544	A4	4563	A5	4582	A5		
4429	C1	4450	C1	7408	A5	4488	A5												

This assembly drawing shows a summary of all possible versions. For components used in a specific version see schematic diagram and respective parts list.

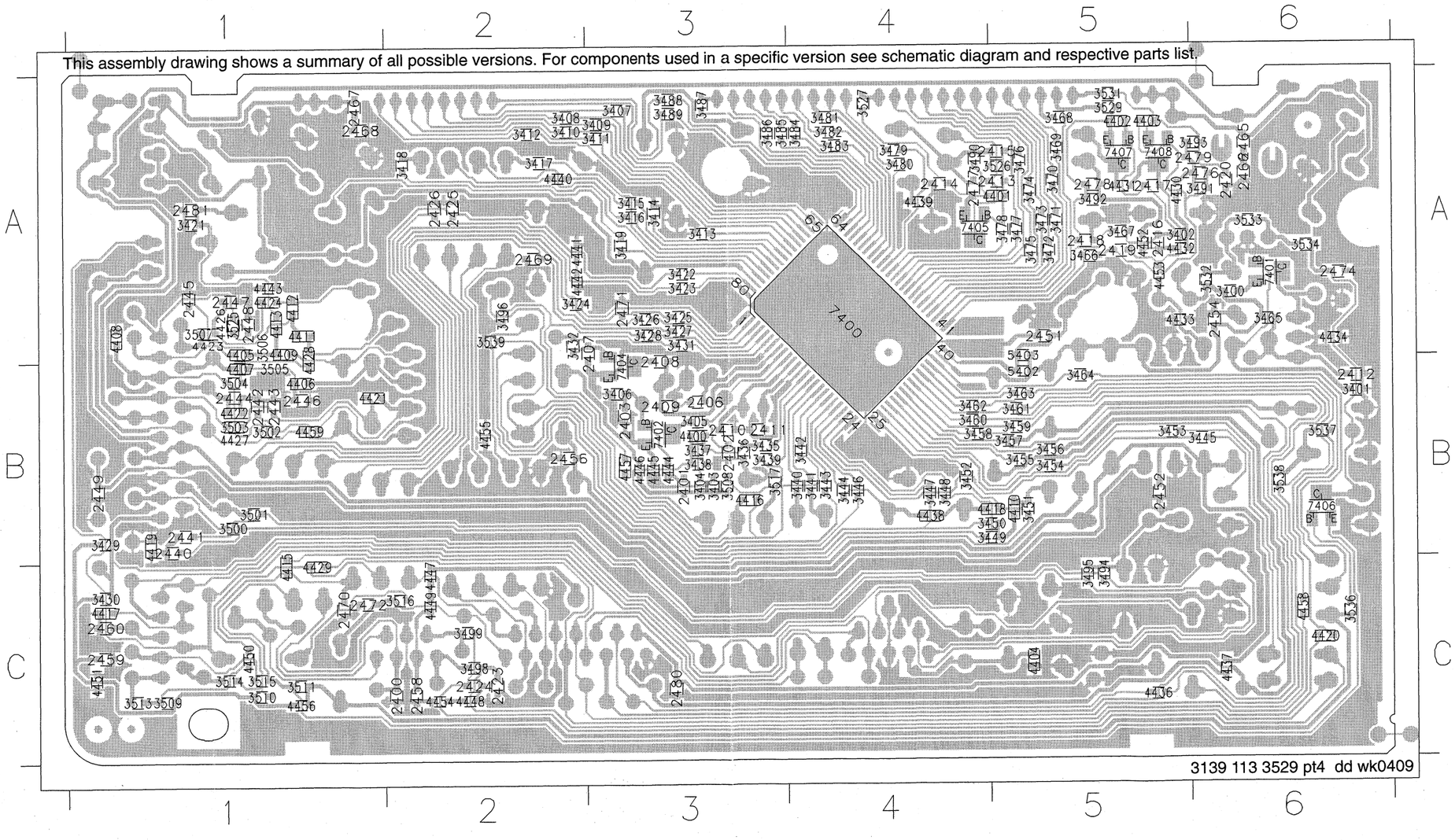

6-5

DISPLAY BOARD - CIRCUIT DIAGRAM PART 1

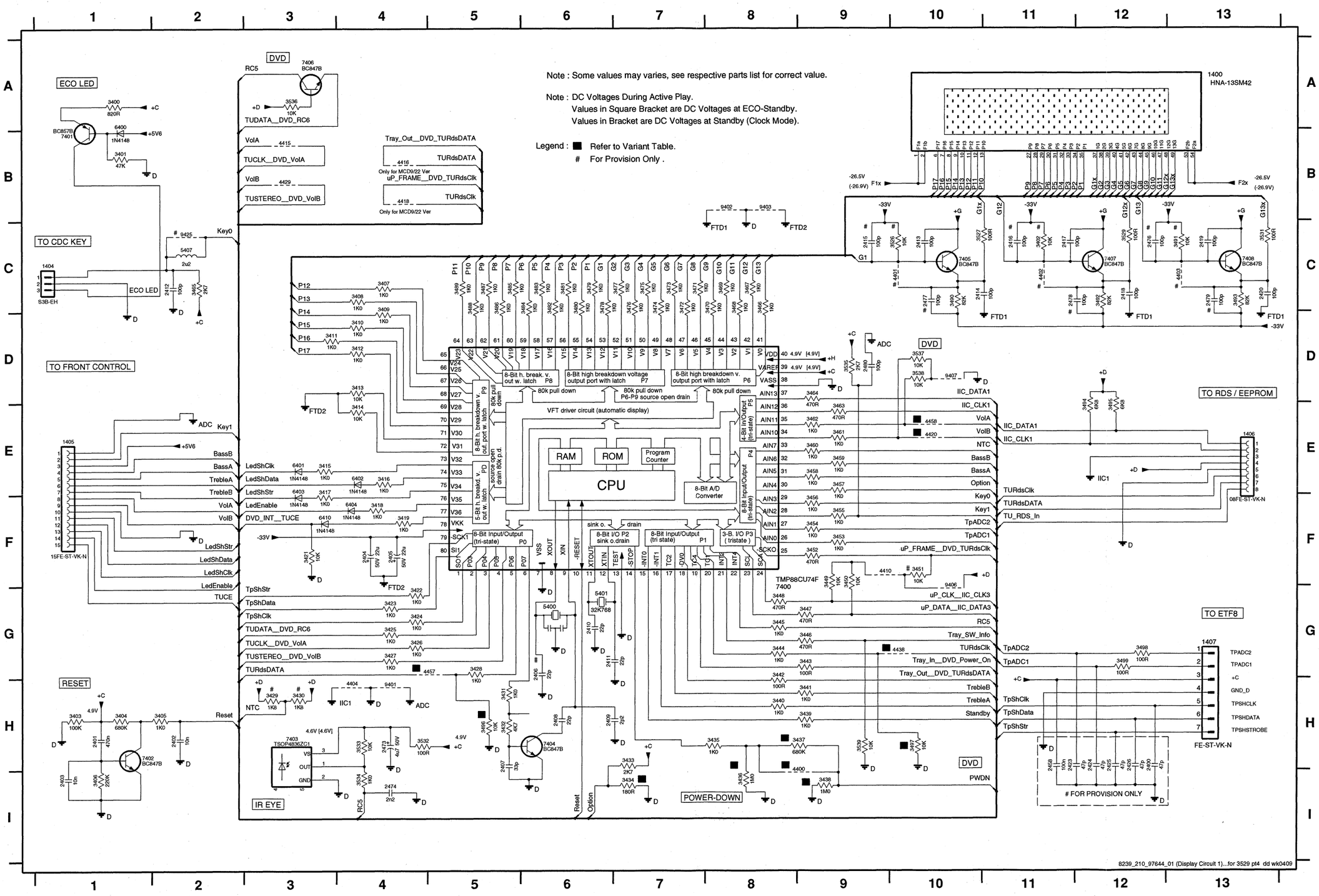

1400 A13	3473 C7
1404 C1	3474 C7
1405 E1	3475 C7
1406 E13	3476 C7
1407 G13	3477 C7
2400 H12	3478 C6
2401 H1	3479 C6
2402 H2	3480 C6
2403 I1	3481 C6
2404 F4	3482 C6
2405 F4	3483 C6
2406 G6	3484 C6
2407 H5	3485 C5
2408 H6	3486 C5
2409 H6	3487 C5
2410 G6	3488 C5
2411 G6	3489 C5
2412 C2	3490 C10
2413 C10	3491 C13
2414 C10	3492 C12
2415 C9	3493 C13
2416 C11	3494 E12
2417 C11	3495 E12
2418 C12	3496 H5
2419 C13	3497 H10
2420 C13	3498 G12
2423 H11	3499 G12
2424 H12	3526 C10
2425 H12	3527 C10
2426 H12	3529 C12
2458 H11	3531 C13
2473 H4	3532 H4
2474 I4	3533 H4
2476 C12	3534 I4
2477 C10	3535 D9
2478 C11	3536 A3
2479 C13	3537 D10
2480 D9	3538 D10
3400 A1	3539 H9
3401 B1	4400 I9
3402 C11	4401 C10
3403 H1	4402 C11
3404 H1	4403 C13
3405 H2	4404 H4
3406 I1	4410 F9
3407 C4	4415 B3
3408 C4	4416 B4
3409 C4	4418 B4
3410 D4	4420 E10
3411 D3	4429 B3
3412 D4	4438 G10
3413 D4	4457 G5
3414 E4	4458 E10
3415 E3	5400 G6
3416 E4	5401 G6
3417 E3	5407 C2
3418 F4	6400 A1
3419 F4	6401 E3
3421 F3	6402 E4
3422 G4	6403 E3
3423 G4	6404 F4
3424 G4	6410 F3
3425 G4	7400 G8
3426 G4	7401 B1
3427 G4	7402 H1
3428 G5	7403 H3
3429 H3	7404 H6
3430 H3	7405 C10
3431 H5	7406 A3
3432 H5	7407 C12
3433 H7	7408 C13
3434 I7	9401 H4
3435 H8	9402 B8
3436 I8	9403 B8
3437 H9	9406 G10
3438 I9	9407 D10
3439 H9	9425 C2
3440 H8	
3441 H9	
3442 G8	
3443 G9	
3444 G8	
3445 G8	
3446 G9	
3447 G9	
3448 G8	
3449 F9	
3450 F9	
3451 F10	
3452 F9	
3453 F9	
3454 F9	
3455 F9	
3456 F9	
3457 E9	
3458 E9	
3459 E9	
3460 E9	
3461 E9	
3462 E9	
3463 E9	
3464 D9	
3465 C2	
3466 C8	
3467 C8	
3468 C8	
3469 C8	
3470 C8	
3471 C7	
3472 C7	

6-6

DISPLAY BOARD - CIRCUIT DIAGRAM PART 2

1401 A3	2442 C6	2446 D4	2450 F3	2454 F3	2460 C9	2464 F10	2468 F10	2472 C9	3501 B5	3505 D4	3509 B8	3513 B10	3517 C8	3521 F9	3525 D6	4408 C4	4413 E6	4422 C5	4427 C5	5403 F3	6405 E2	6409 G8	9449 D6
1402 B11	2443 C5	2447 D5	2451 F3	2456 F3	2461 E10	2465 E10	2469 C8	2481 C7	3502 B6	3506 D4	3510 B8	3514 B9	3518 E9	3522 F8	4405 D4	4409 D5	4417 C10	4423 D4	4428 D5	5404 C6	6406 F2	9400 C6	9450 D6
2440 B5	2444 C5	2448 D5	2452 F2	2457 F5	2462 E10	2466 E10	2470 C8	3420 C8	3503 C5	3507 D4	3511 B9	3515 B10	3519 D9	3523 F9	4406 D5	4411 D5	4419 A4	4424 D6	4459 C4	5405 D6	6407 E4	9404 C6	9451 D6
2441 B6	2445 D4	2449 F2	2453 F2	2459 F5	2463 F10	2467 F10	2471 C9	3500 B5	3504 C4	3508 B8	3512 B9	3516 B9	3520 E9	3524 F9	4407 C4	4412 D5	4421 C6	4426 E6	5402 E3	5406 D6	6408 F4	9405 B6	9453 B9

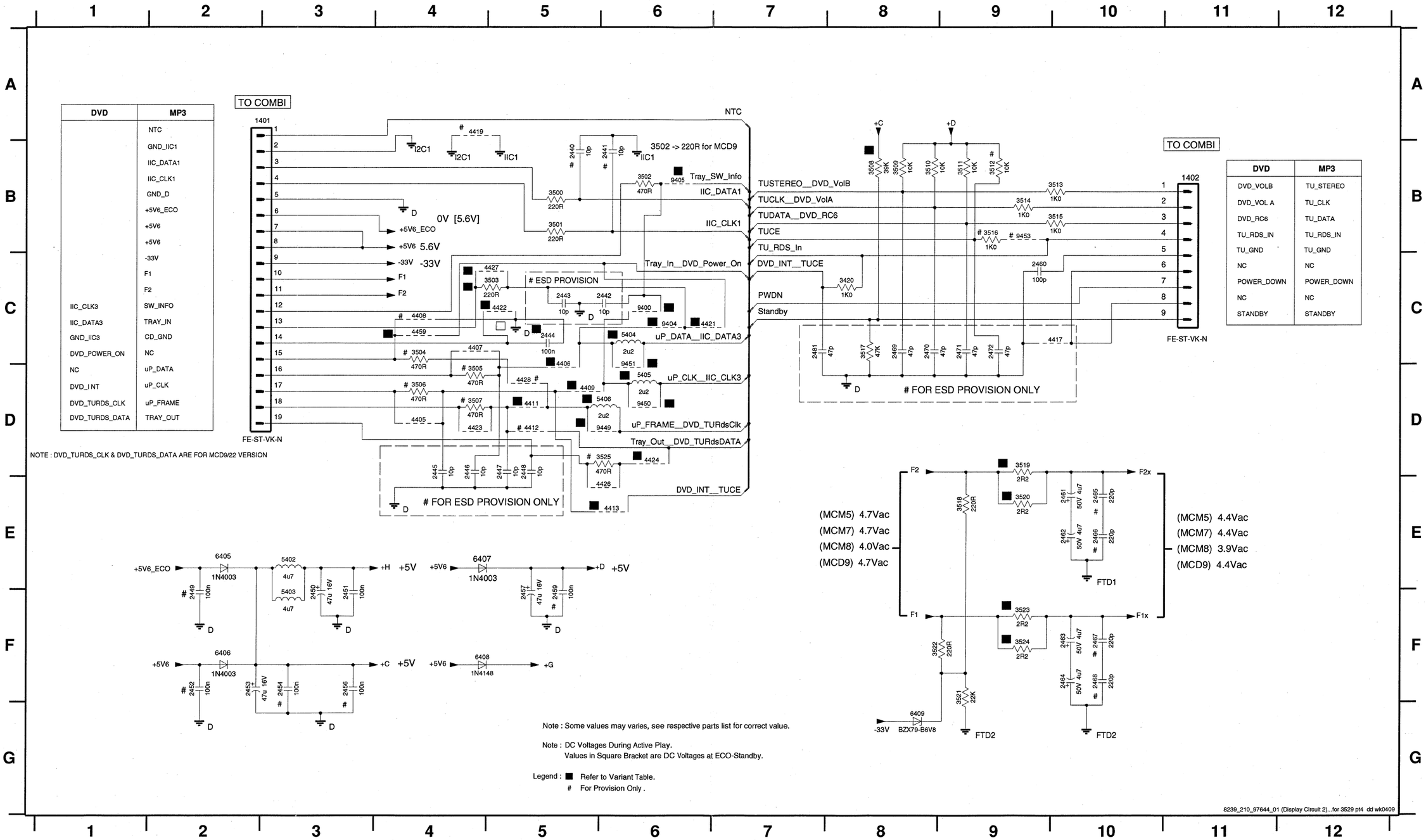

DVD	MP3
	NTC
	GND_IIC1
	IIC_DATA1
	IIC_CLK1
	GND_D
	+5V6_ECO
	+5V6
	+5V6
	-33V
	F1
	F2
IIC_CLK3	SW_INFO
IIC_DATA3	TRAY_IN
GND_IIC3	CD_GND
DVD_POWER_ON	NC
NC	uP_DATA
DVD_I NT	uP_CLK
DVD_TURDS_CLK	uP_FRAME
DVD_TURDS_DATA	TRAY_OUT

NOTE : DVD_TURDS_CLK & DVD_TURDS_DATA ARE FOR MCD9/22 VERSION

DVD	MP3
DVD_VOLB	TU_STEREO
DVD_VOL A	TU_CLK
DVD_RC6	TU_DATA
TU_RDS_IN	TU_RDS_IN
TU_GND	TU_GND
NC	NC
POWER_DOWN	POWER_DOWN
NC	NC
STANDBY	STANDBY

Note : Some values may varies, see respective parts list for correct value.

Note : DC Voltages During Active Play.
Values in Square Bracket are DC Voltages at ECO-Standby.

Legend : ■ Refer to Variant Table.
For Provision Only .

8239_210_97644_01 (Display Circuit 2)...for 3529 pt4 dd wk0409

DISPLAY BOARD - VARIANT TABLE

	MCM9/22 MCM9/25	MCM9/37	MCM11/22 MCM11/25	MCM11/21
2444	100N	100N	100N	100N
3434	180R	180R	470R	470R
3436	1M	1M	2M2	2M2
3437	680K	680K	-	-
3438	1M	1M	-	-
3496	-	10K	-	10K
3497	-	10K	-	10K
3503	-	-	-	-
3508	39K	39K	-	-
3519	2R2	2R2	1R	1R
3520	2R2	2R2	1R	1R
3523	2R2	2R2	1R	1R
3524	2R2	2R2	1R	1R
4400	-	-	X	X
4406	X	X	X	X
4409	X	X	X	X
4411	X	X	X	X
4413	-	-	-	-
4420	X	X	X	X
4421	X	X	X	X
4422	-	-	-	-
4424	X	X	X	X
4427	X	X	X	X
4438	X	-	X	-
4457	X	-	X	-
4458	X	X	X	X
4459	-	-	-	-
5404	2U2	2U2	2U2	2U2
5405	2U2	2U2	2U2	2U2
5406	2U2	2U2	2U2	2U2
9400	-	-	-	-
9404	-	-	-	-
9405	X	X	X	X
9449	-	-	-	-
9450	-	-	-	-
9451	-	-	-	-

X - Item in use.

6-7

TOP KEY BOARD - COMPONENT LAYOUT

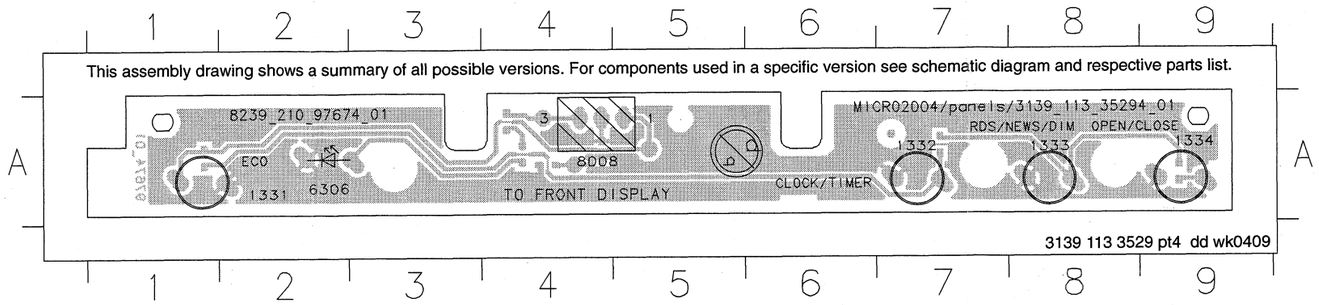

1331 A2
1332 A7
1333 A8
1334 A9
6306 A2
8008 A4

TOP KEY BOARD - CHIP LAYOUT

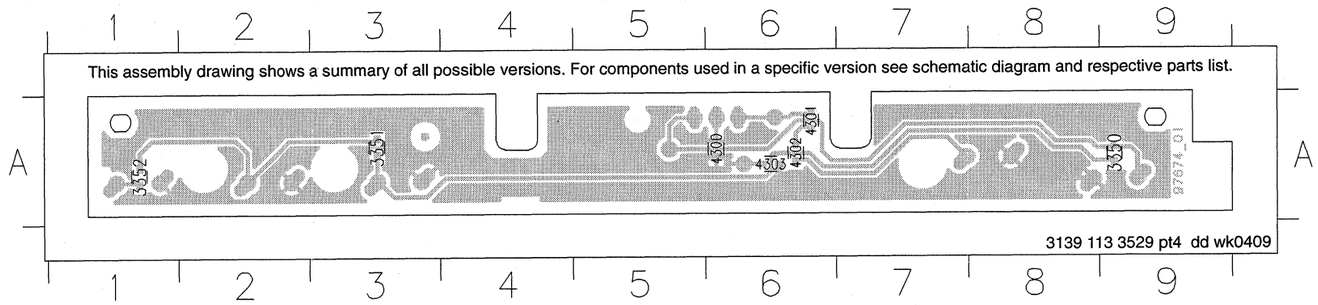

3350 A9
3351 A3
3352 A1
4300 A6
4301 A6
4302 A6
4303 A6

TOP KEY BOARD - CIRCUIT DIAGRAM

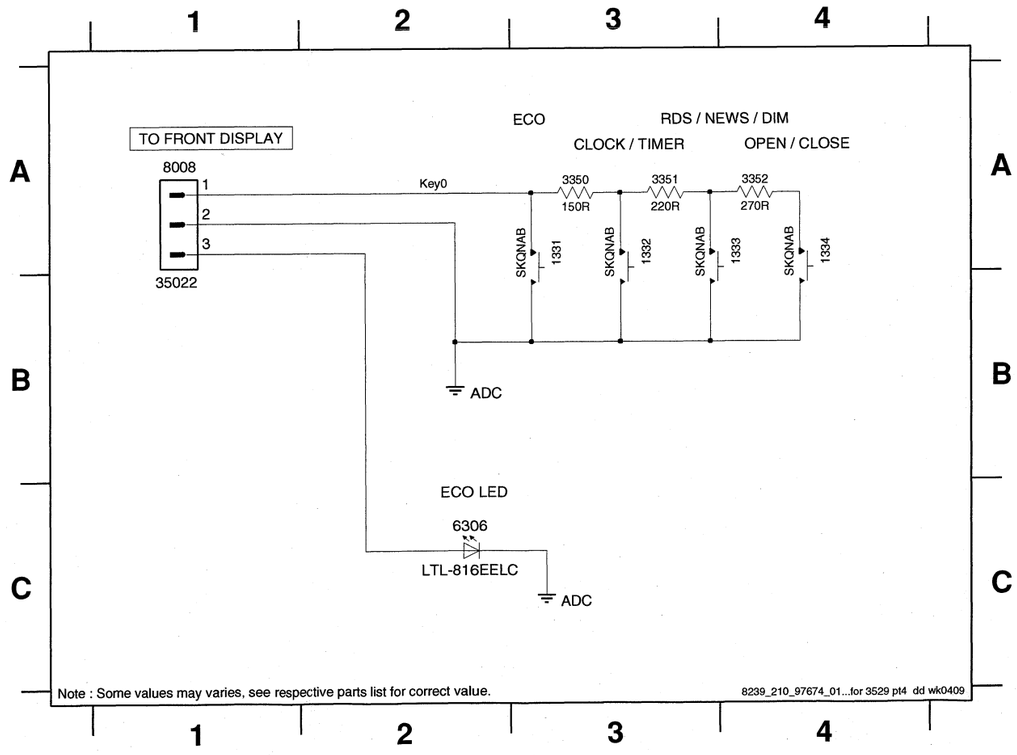

1331 A3
1332 A3
1333 A4
1334 A4
3350 A3
3351 A3
3352 A4
6306 C2
8008 A1

6-8

CONTROL BOARD - COMPONENT LAYOUT

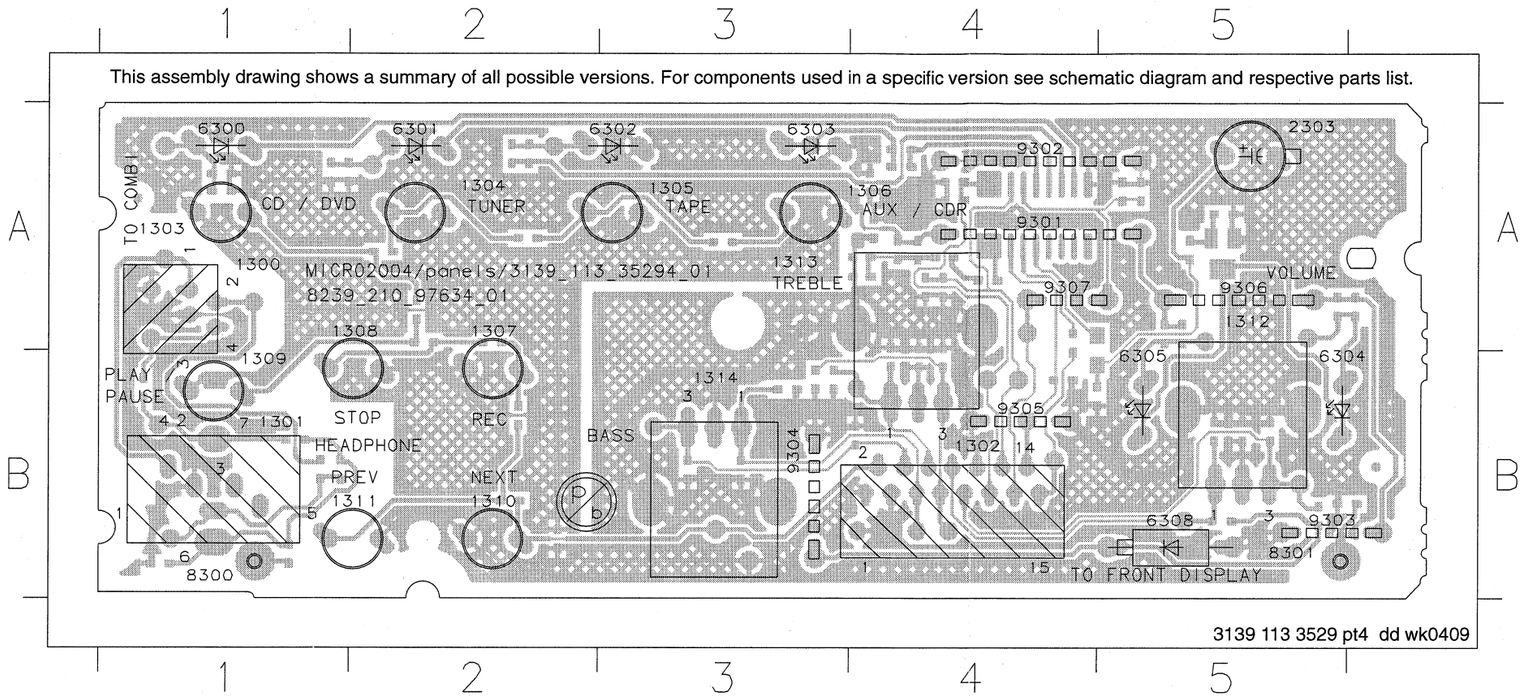

1300 A1
1301 B1
1302 B4
1303 A1
1304 A2
1305 A3
1306 A4
1307 A2
1308 A2
1309 B1
1310 B2
1311 B2
1312 A5
1313 A3
1314 B3
2303 A5
6300 A1
6301 A2
6302 A3
6303 A3
6304 B5
6305 B5
6308 B5
8300 B1
8301 B5
9301 A4
9302 A4
9303 B5
9304 B3
9305 B4
9306 A5
9307 A4

CONTROL BOARD - CHIP LAYOUT

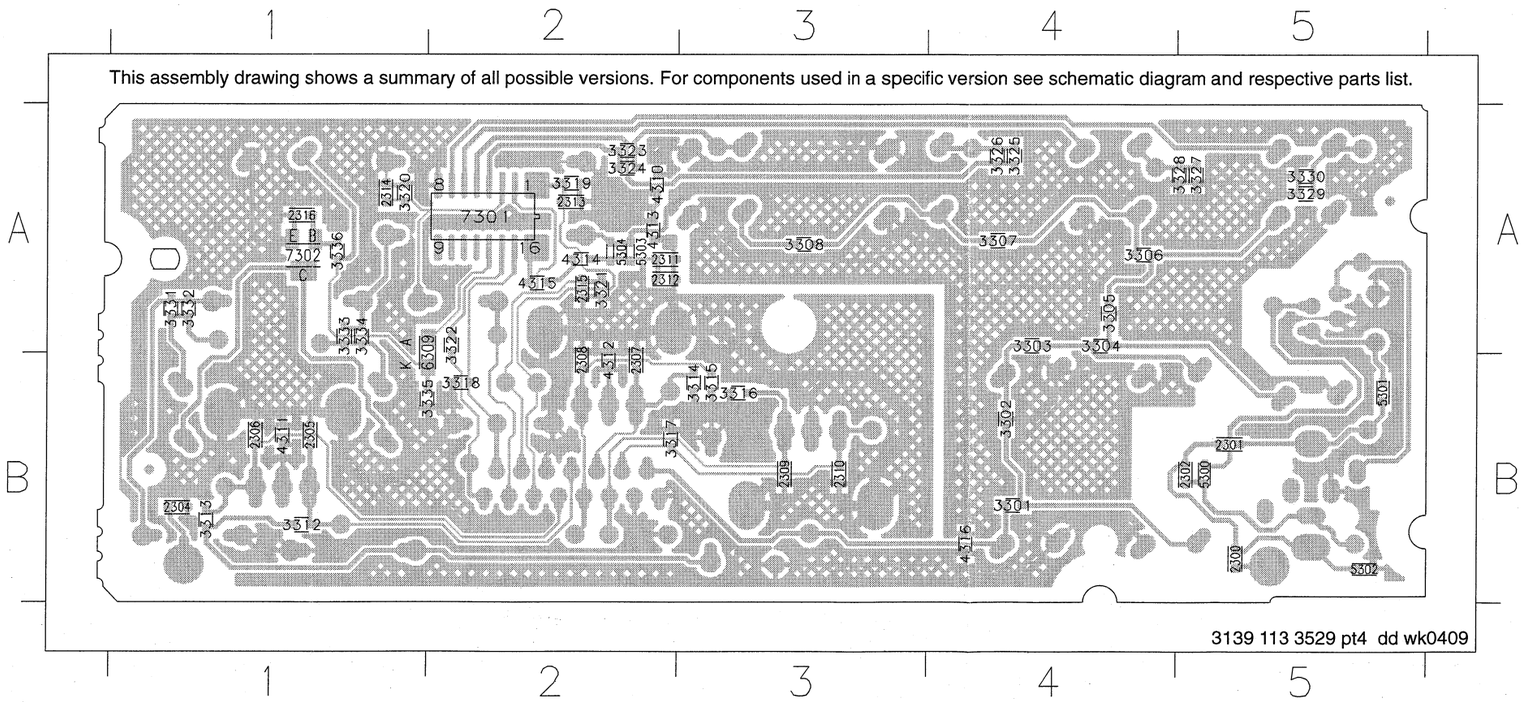

2300 B5
2301 B5
2302 B5
2304 B1
2305 B1
2306 B1
2307 B2
2308 B2
2309 B3
2310 B3
2311 A2
2312 A2
2313 A2
2314 A1
2315 A2
2316 A1
3301 B4
3302 B4
3303 A4
3304 A4
3305 A4
3306 A4
3307 A4
3308 A3
3312 B1
3313 B1
3314 B3
3315 B3
3316 B3
3317 B2
3318 B2
3319 A2
3320 A1
3321 A2
3322 A2
3323 A2
3324 A2
3325 A4
3326 A4
3327 A5
3328 A5
3329 A5
3330 A5
3331 A1
3332 A1
3333 A1
3334 A1
3335 B1
3336 A1
4310 A2
4311 B1
4312 B2
4313 A2
4314 A2
4315 A2
4316 B4
5300 B5
5301 B5
5302 B5
5303 A2
5304 A2
6309 A1
7301 A2
7302 A1

6-9

CONTROL BOARD - CIRCUIT DIAGRAM PART 1

1300 A7 1302 A1 1304 A5 1306 A6 1308 A4 1310 A3 1312 E2 1314 E5 2301 A8 2304 E2 2306 E3 2308 E5 2310 E6 3302 A3 3304 A4 3306 A5 3308 A5 3313 D3 3315 D5 3317 D6 5301 A8 6308 D2 8301 E2
1301 A9 1303 A5 1305 A5 1307 A3 1309 A4 1311 A3 1313 E4 2300 B8 2302 A9 2305 E3 2307 E4 2309 E6 3301 A3 3303 A4 3305 A4 3307 A5 3312 D3 3314 D4 3316 D6 5300 A8 5302 B8 8300 B7

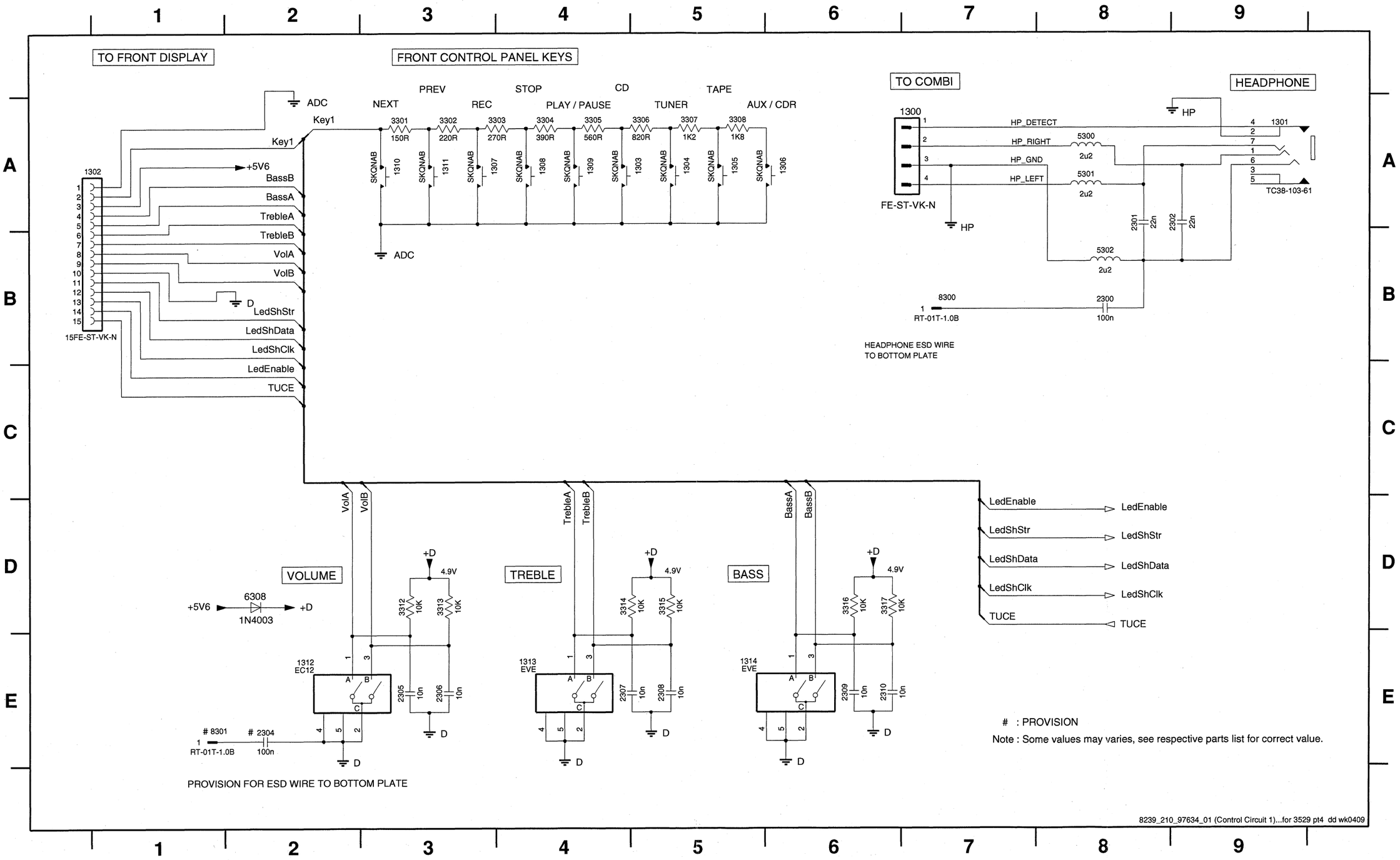

6-10

CONTROL BOARD - CIRCUIT DIAGRAM PART 2

2303 D5 2312 A4 2314 C3 2316 C8 3319 C2 3321 D2 3323 B5 3325 B6 3327 B7 3329 B7 3331 B8 3333 B9 3335 D5 5303 A3 6300 B8 6302 B6 6304 B8 6309 C5 7302 C9
2311 A4 2313 C3 2315 D3 3318 B2 3320 C2 3322 E2 3324 B6 3326 B6 3328 B7 3330 B8 3332 B8 3334 B9 3336 C5 5304 A3 6301 B7 6303 B5 6305 B9 7301 B3

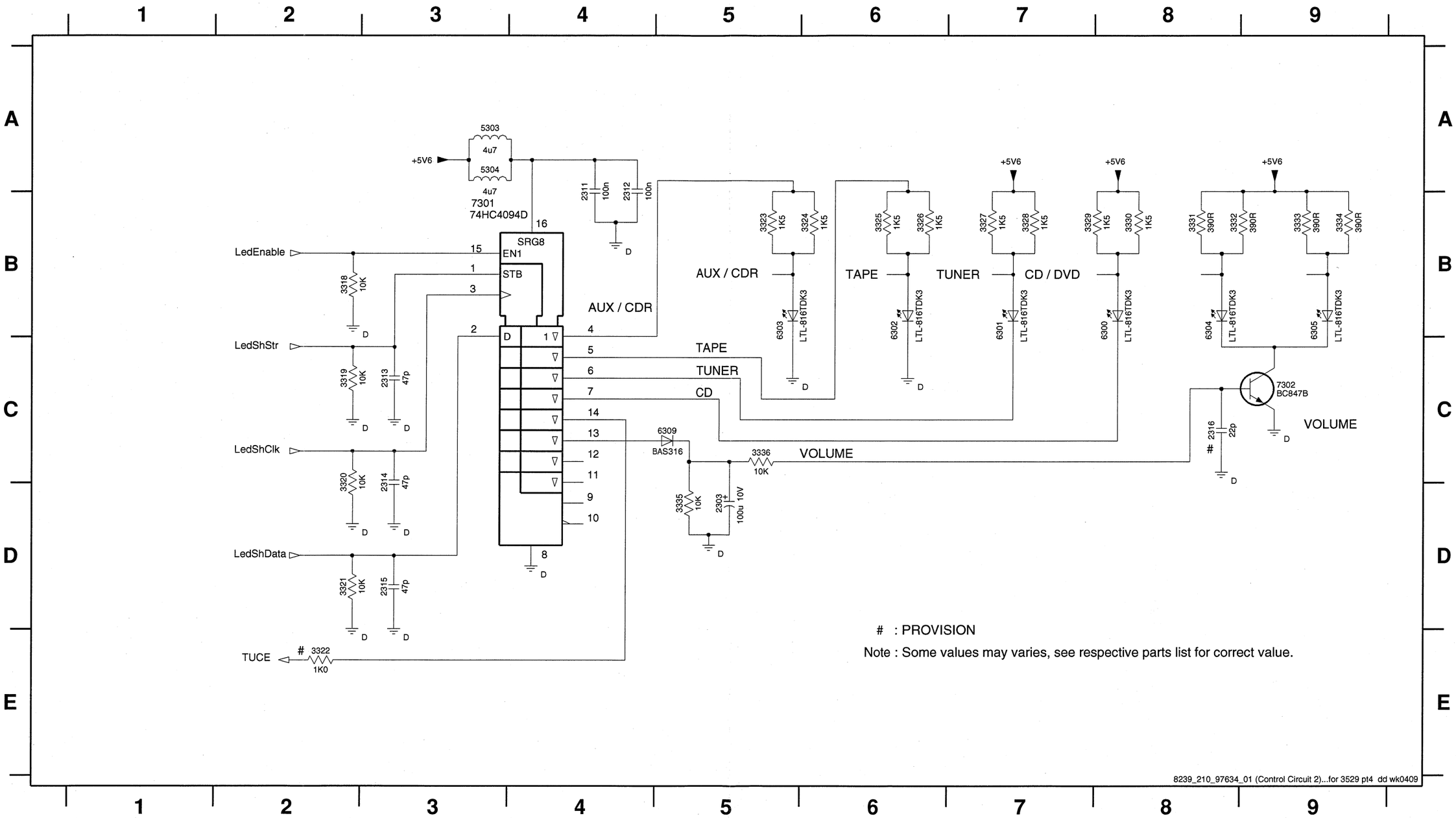

EEPROM BOARD - COMPONENT LAYOUT

1600 A1 3603 A2 3607 A2 9600 A1
2604 B2 3606 A2 5602 A2

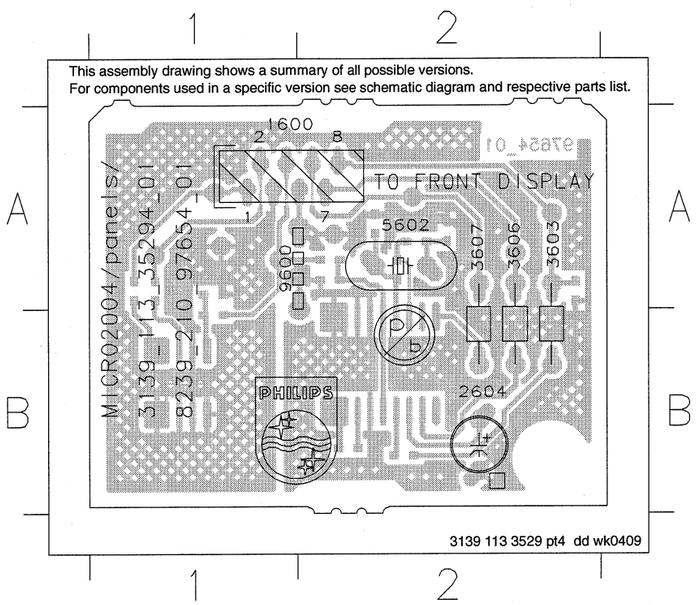

EEPROM BOARD - CHIP LAYOUT

2600 A2 2605 A1 3601 A2 5600 B2
2601 A1 2606 A1 3602 A1 5601 A1
2602 B1 2607 A1 3604 A1 7600 B2
2603 B1 3600 A2 3605 A1 7601 B1

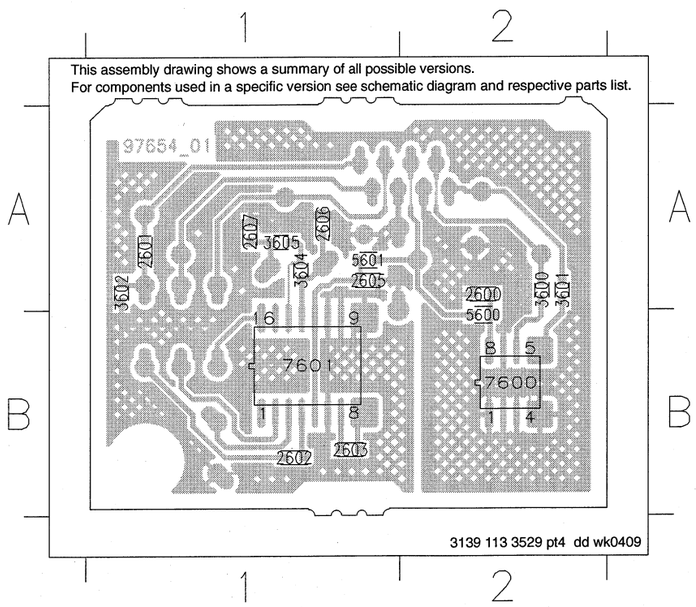

EEPROM BOARD - CIRCUIT DIAGRAM

1600 A4 2601 C1 2603 D1 2605 D4 2607 E3 3601 B2 3603 C1 3605 E2 3607 D3 5601 C2 7600 A1
2600 A2 2602 D1 2604 D3 2606 E2 3600 B2 3602 C1 3604 E2 3606 D3 5600 A1 5602 E2 7601 C1

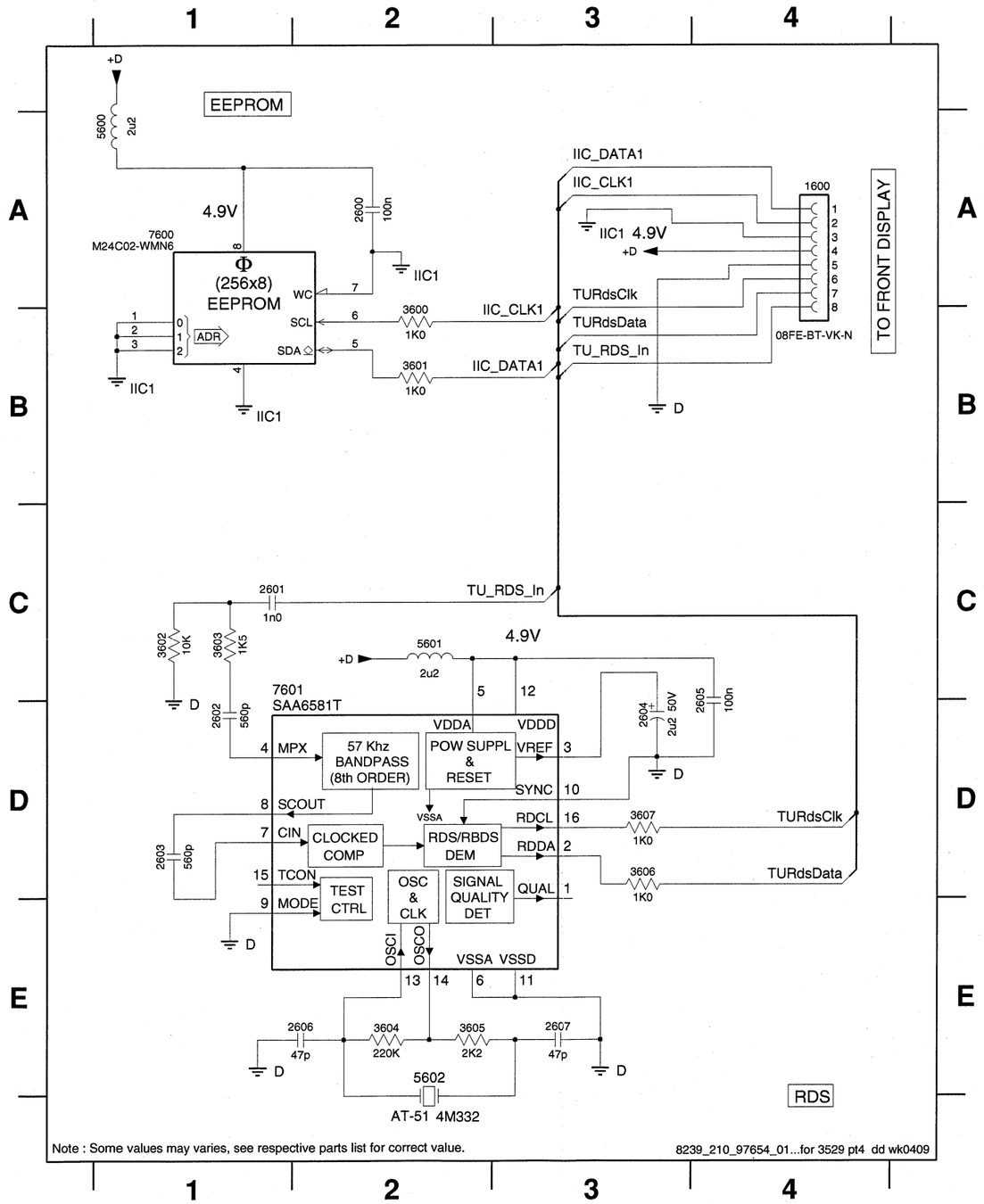

ELECTRICAL PARTS - FRONT BOARD

1301	2422 026 05563	SOC PHONE V 1P F 3.5 ST
1303	4822 276 13775	SWITCH
1304	4822 276 13775	SWITCH
1305	4822 276 13775	SWITCH
1306	4822 276 13775	SWITCH
1307	4822 276 13775	SWITCH
1308	4822 276 13775	SWITCH
1309	4822 276 13775	SWITCH
1310	4822 276 13775	SWITCH
1311	4822 276 13775	SWITCH
1312	9940 000 02116	ROTARY ENCODER
1313	9940 000 02117	ROTARY ENCODER
1314	9940 000 02117	ROTARY ENCODER
1331	4822 276 13775	SWITCH
1332	4822 276 13775	SWITCH
1333	4822 276 13775	SWITCH
1334	4822 276 13775	SWITCH
1400	3139 110 53601	FTD HNA-13SM42 (MCM7)
5400	5322 242 73686	CST12,00MTW-TF01
6300	9940 000 02114	LED 3MM SUPER BLUE
6301	9940 000 02114	LED 3MM SUPER BLUE
6302	9940 000 02114	LED 3MM SUPER BLUE
6303	9940 000 02114	LED 3MM SUPER BLUE
6304	9940 000 02114	LED 3MM SUPER BLUE
6305	9940 000 02114	LED 3MM SUPER BLUE
6306	9940 000 02115	LED 3MM 3R4HD-7(RED)
7301	4822 209 15449	74HC4094D
7400	9940 000 02112	IC 88CU74YFG-6C67(TZ) MASK
7403	9322 185 95667	IR RECEIVER TSOP4836
7600	9940 000 02113	IC M24C02-WMN6 EEPROM
	9940 000 02123	FFC CABLE 9P L=180MM
	9940 000 02124	FFC CABLE 19P L=180MM
	9940 000 02125	FFC CABLE 15P L=130MM

Note: Only these parts mentioned in the list are normal service parts.

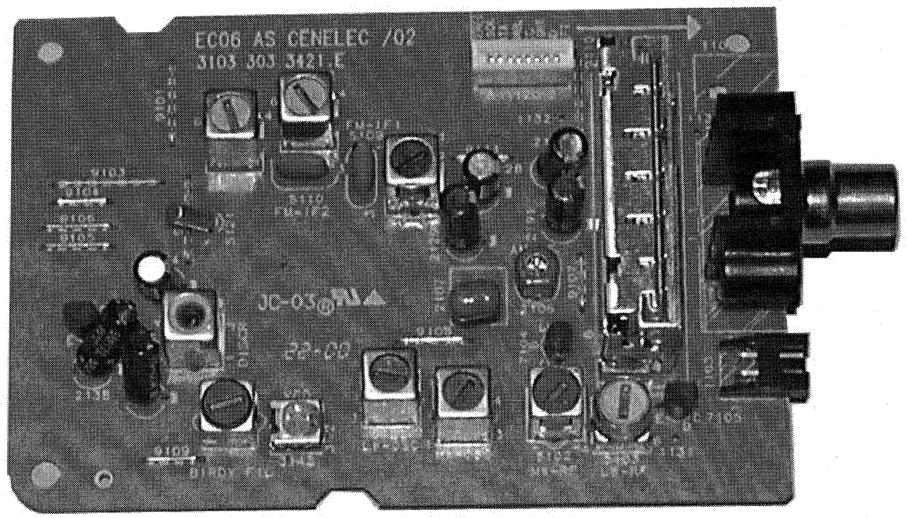

ECO6 Tuner Board

version: ***SYSTEMS CENELEC***

TABLE OF CONTENTS

Blockdiagram.....7B-1
Schematic Diagram.....7B-2
Component Layout.....7B-3
Adjustment table.....7B-3
Electrical Partslist.....7B-4

BLOCK DIAGRAM

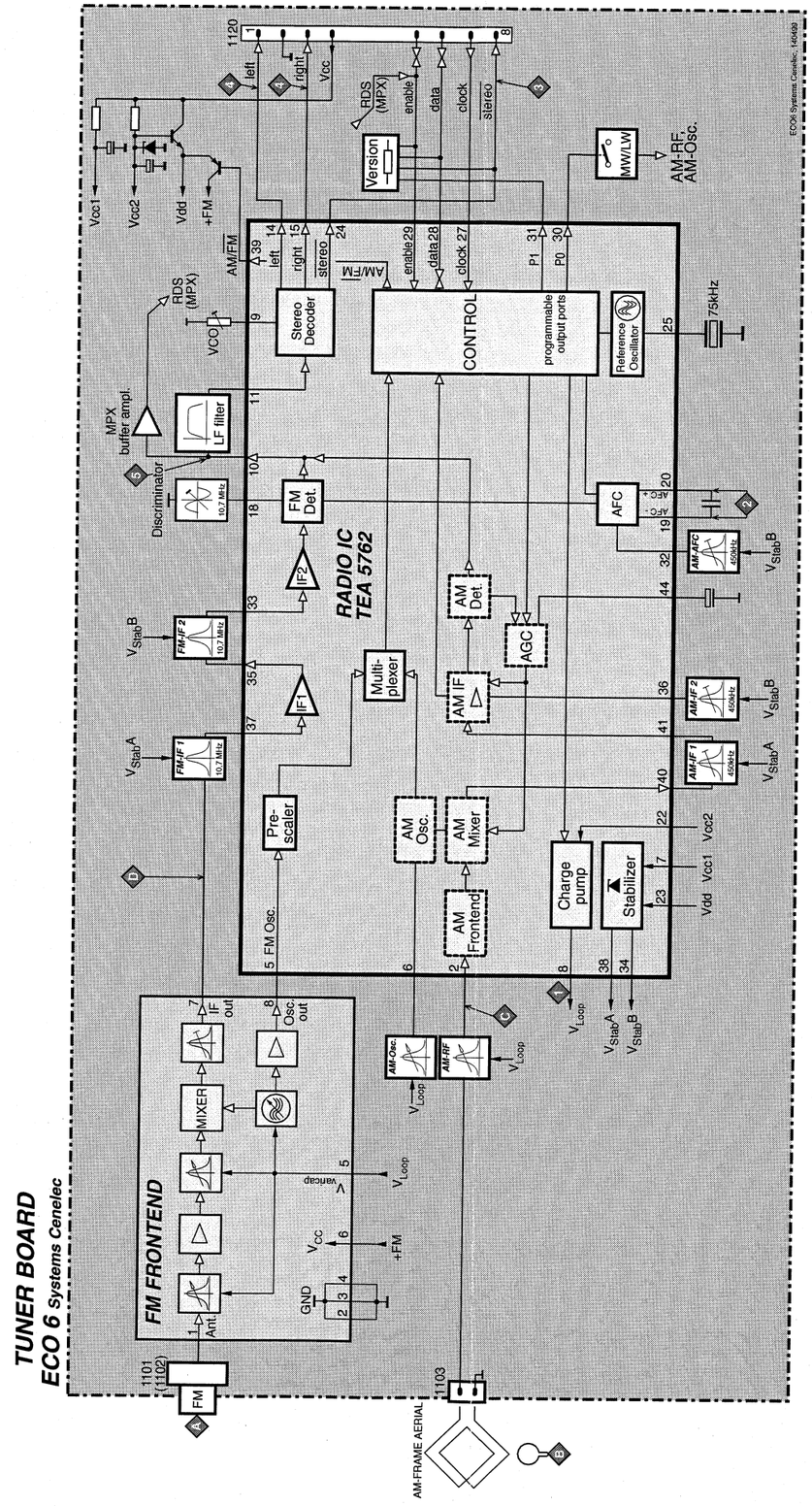

7B-2

TUNER BOARD ECO6 / SYSTEMS-CENELEC

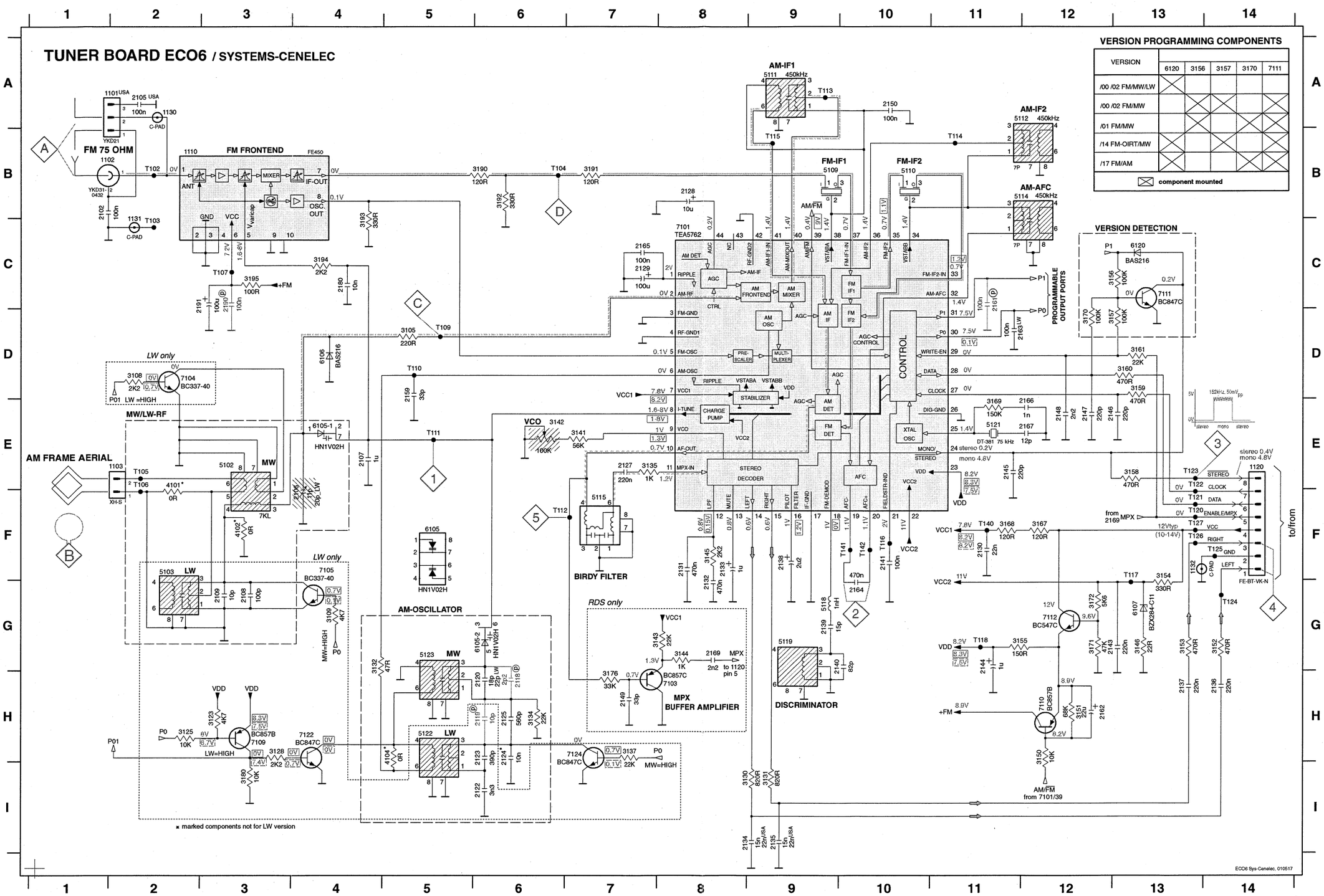

VERSION PROGRAMMING COMPONENTS

VERSION	6120	3156	3157	3170	7111
/00 /02 FM/MW/LW	X				
/00 /02 FM/MW		X	X	X	X
/01 FM/MW		X	X		X
/14 FM-OIRT/MW	X			X	
/17 FM/AM	X			X	X

X component mounted

1101	A2	5121	E11
1102	B1	5122	H5
1103	E2	5123	G5
1110	B2	6105-1	E4
1120	E14	6105-2	G6
1130	A2	6106	D4
1131	C2	6107	G13
1132	F13	6120	C13
2102	B1	7101	C8
2105	A2	7103	H8
2106	E3	7104	D2
2107	E4	7105	F4
2108	G3	7109	H3
2109	G3	7110	H12
2118	H6	7111	C13
2119	H6	7112	G12
2120	H6	7122	H4
2122	I6	7124	H7
2123	H6	T102	B2
2124	H6	T103	B2
2125	H6	T104	B6
2127	E7	T105	E2
2128	B8	T106	E2
2129	C7	T107	C3
2130	F11	T109	D5
2131	F8	T110	D5
2132	F8	T111	E5
2133	F8	T112	F7
2134	I8	T113	A9
2135	I9	T114	B11
2136	H14	T116	F10
2137	H13	T117	F13
2138	F9	T118	G11
2139	G9	T120	F13
2140	G9	T121	F13
2141	F10	T122	E13
2143	G12	T123	E13
2144	G11	T124	G14
2145	E11	T125	F14
2146	E12	T126	F13
2147	E12	T127	F13
2148	E12	T140	F11
2149	H7	T141	F10
2150	A10	T142	F10
2159	D5		
2161	C11		
2162	H12		
2163	D11		
2164	G10		
2165	C7		
2166	E11		
2167	E11		
2169	G8		
2180	C4		
2190	C3		
2191	C3		
3105	D5		
3108	D2		
3109	G4		
3123	H3		
3125	H2		
3128	H3		
3130	I9		
3131	I9		
3132	G4		
3134	H6		
3135	E7		
3137	H7		
3141	E7		
3142	E6		
3143	G7		
3144	G8		
3145	F8		
3146	G13		
3150	H12		
3151	H12		
3152	G14		
3153	G13		
3154	F13		
3155	G12		
3156	C12		
3157	D12		
3158	E13		
3159	D13		
3160	D13		
3161	D13		
3167	F12		
3168	F11		
3169	E11		
3170	D12		
3171	G12		
3172	G12		
3176	H7		
3180	I3		
3190	B6		
3191	B7		
3192	B6		
3193	B4		
3194	C4		
3195	C3		
4101	E2		
4102	F3		
4104	H5		
5102	E3		
5103	F2		
5109	B9		
5110	B10		
5111	A9		
5112	A11		
5114	B11		
5115	E7		
5118	G9		
5119	G9		

LEGEND

* ... only assembled in FM/AM-version
(p)...for provision only
USA ... for USA version only
LW ... for LW version only

SMD jumper
41xx
0R

(V) EVM

...V FM mode stereo
[...V] MW mode
[...V] LW mode
voltages measured while set is tuned to a strong transmitter

Signal path
FM
AM
MPX (Audio Frequency)
AF - left/right

1101 B5 1110 B4 1131 C5 2107 B3 2133 C1 2162 A4 5102 C4 5110 A2 5114 A2 5121 B2 7104 C4 9101 A2 9104 B1 9107 B4 9110 A4
1102 B5 1120 A4 1132 A4 2128 A3 2138 B1 2191 B4 5103 C4 5111 A3 5115 C2 5122 C3 7105 C5 9102 B2 9105 B1 9108 B3 9111 A3
1103 C5 1130 A5 2106 B4 2129 B3 2144 B1 3142 C2 5109 B3 5112 A2 5119 B2 5123 C3 7112 B1 9103 A1 9106 B1 9109 C2

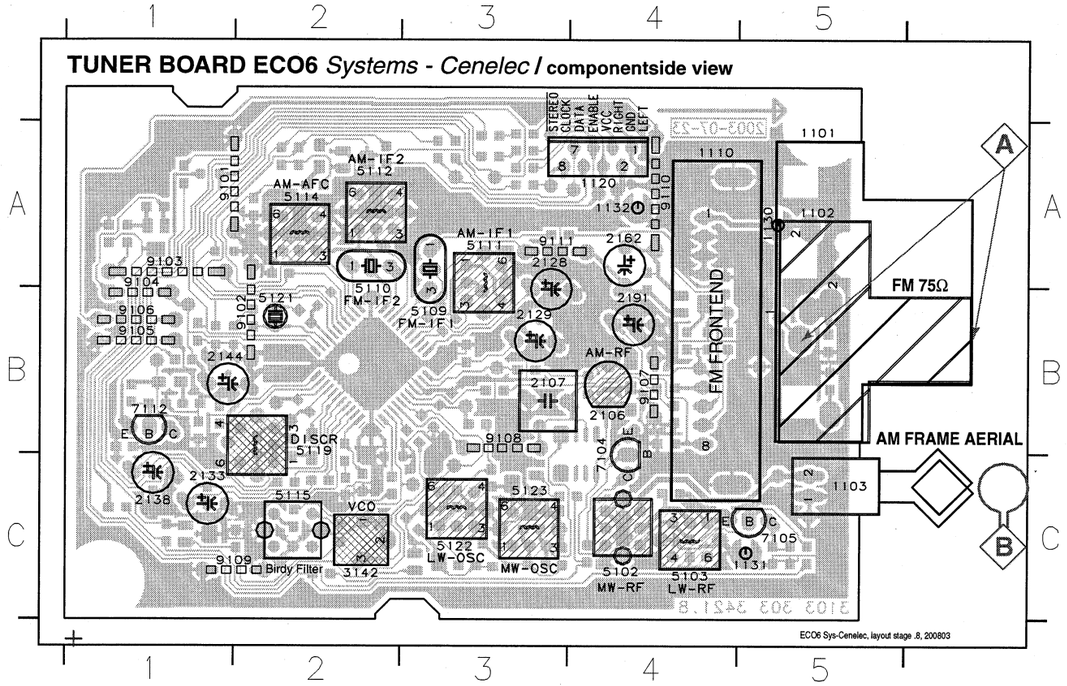

2102 B1 2120 C3 2130 B3 2137 A3 2146 B5 2161 A4 2169 A3 3123 A5 3134 C3 3145 C4 3154 B5 3160 A3 3171 B5 3192 A2 4104 C3 6106 B2 7110 B2
2105 B1 2122 C3 2131 C4 2139 B4 2147 A5 2163 A4 2180 B2 3125 A5 3135 C4 3146 B5 3155 B5 3161 A4 3172 B5 3193 B2 4105 B2 6107 B5 7111 A4
2108 C1 2123 C3 2132 C4 2140 B4 2148 B4 2164 B4 2190 B2 3128 C2 3137 C4 3150 B3 3156 A4 3167 A5 3176 C4 3194 B2 4106 B3 6120 A4 7122 C3
2109 C1 2124 C3 2134 C5 2141 B5 2149 C4 2165 B3 3105 B3 3130 C4 3141 B3 3151 A2 3157 A4 3168 C5 3180 A5 3195 B2 4107 C4 7101 B4 7124 C3
2118 C3 2125 C3 2135 C5 2143 B5 2150 B3 2166 B5 3108 C2 3131 C4 3143 C5 3152 A3 3158 A3 3169 B4 3190 B2 4101 C2 5118 C4 7103 C5
2119 C3 2127 C4 2136 A3 2145 B5 2159 B3 2167 B4 3109 C1 3132 B3 3144 A5 3153 A3 3159 A3 3170 A4 3191 A3 4102 C2 6105 B2 7109 A5

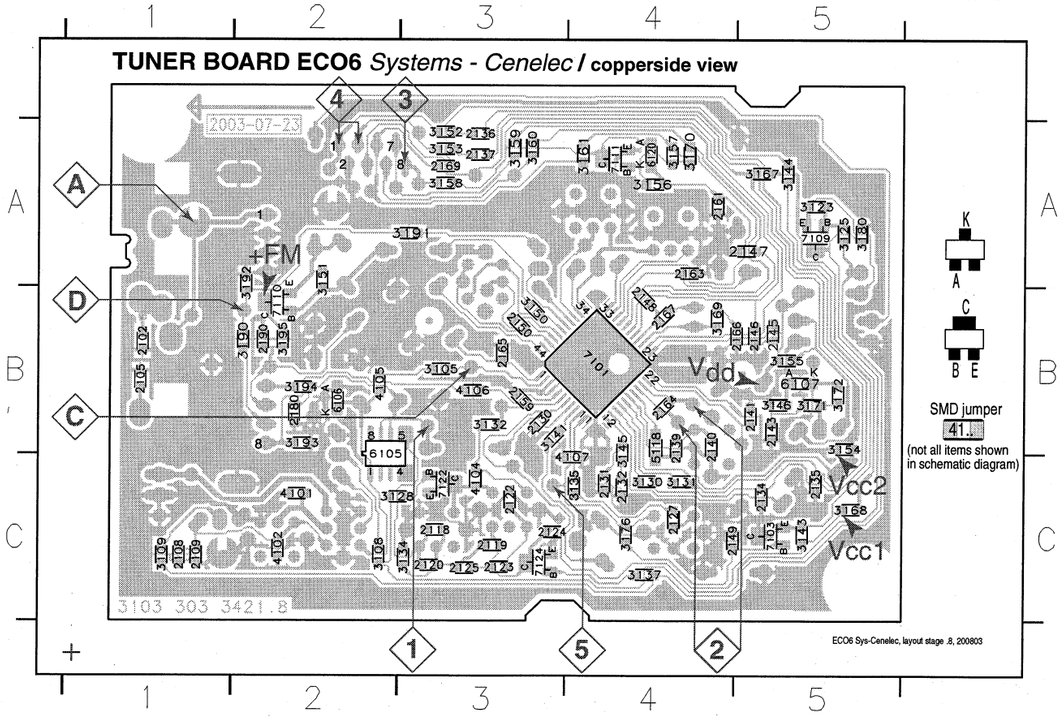

These assembly drawings show a summary of all possible versions.
For components used in a specific version see schematic diagram respectively partslist.

TUNER ADJUSTMENT TABLE (ECO6 Cenelec FM/MW - and FM/MW/LW - versions with AM-frame aerial)

Waverange	Input frequency	Input	Tuned to	Adjust	Output	Scope/Voltmeter
VARICAP ALIGNMENT						
FM 87.5 - 108MHz (50kHz grid)			108MHz	check	1	8V ±1.2V
			87.5MHz	check		1.6V ±0.5V
MW 531 - 1602kHz (9kHz grid)			1602kHz	5123		8V ±0.2V 3-band 6.9V ±0.2V 2-band
			531kHz	check		1.1V ±0.4V
LW 153 - 279kHz (3kHz grid)			279kHz	5122		8V ±0.2V
			153kHz	check		1.1V ±0.4V
FM - IF						
FM	10.7MHz, 45mV continuous wave	D	IC 7101 21 shortcircuit to block AFC 2141	5119	2	0mV ±3mV
FM - VCO						
FM	98MHz, 1mV continuous wave	A	98MHz	3142	3	152kHz ±1kHz 1)
FM RF (channel separation)	Note: The FM-frontend unit has already been adjusted by the factory and needs therefore no further adjustments for service purposes.					
FM	98MHz, 1mV 90% Left + 9% pilot mod=1kHz	A	98MHz	IF coil inside FM frontend 1110	4	right channel min.
AM IF						
MW	450kHz connect pin 6 of IC 7101 (AM Osc.) with 3.3kΩ to Vcc	C Δf = ±10kHz V_{RF} = 0.5mV (as low as possible)	IC 7101 36 100nF 220R	5111	5	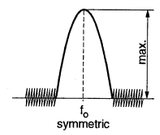
			IC 7101 40 100nF 220R see remark 2)	5112		
AM AFC **MW**		C continuous wave V_{RF} = 2mV		5114	2	0mV ±2mV
AM RF 3)						
MW	1494kHz	B Δf = ±30kHz V_{RF} as low as possible	1494kHz	2106	5	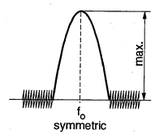
	558kHz		558kHz	5102		
LW	198kHz		198kHz	5103		

ECO6 Sys Cenelec, 190599

Use Service Testprogram. By selecting the TUNER TEST test frequencies will be stored as preset frequencies automatically.

1) If sensitivity of frequency counter is too low adjust to max. channel separation (input signal: stereo left 90% + 9%, adjust output on right channel to minimum)

2) RC network serves for damping the IF-filter while adjusting the other one.

3) For AM RF adjustments the original frame antenna has to be used! MW has to be aligned before LW.

↕ Repeat

Electrical Partslist *ECO6* SYSTEMS-CENELEC

7B-4

MISCELLANEOUS

1101	2422 015 19376	SOCKET CLICKFIT 2P	USA only
1102	4822 267 10283	SOCKET COAX, IEC 75Ω	not USA
1103	4822 265 31184	JST CONNECTOR, 2 POLE	
1110	2422 542 90071	FM FRONTEND	
1120	4822 265 11515	FFC SOCKET, 8P	

CAPACITORS

2102©	4822 126 13838	100nF	10%	50V		not USA
2105©	4822 126 13838	100nF	10%	50V		USA only
2106	2020 800 00204	TRIMCAP. 4,2 - 20pF, N750				LW only
2106	2020 800 00191	TRIMCAP. 3 - 11pF, N450				FM/AM only
2107	4822 121 51319	1µF	20%	50V		
2108©	5322 122 32531	100pF	5%	50V		LW only
2109©	5322 122 32448	10pF	5%	50V		LW only
2120©	4822 126 13689	18pF	1%	63V		FM/AM only
2120©	5322 122 32658	22pF	5%	50V		LW only
2122©	4822 122 33891	3,3nF	10%	63V		LW only
2123©	2020 552 93494	390pF	1%	50V		LW only
2124©	4822 122 33177	10nF	20%	50V		FM/AM only
2125©	2020 552 96199	560pF	1%	50V		
2127©	4822 126 14076	220nF	20%	25V		
2128	4822 124 40248	10µF	20%	63V		
2129	4822 124 41584	100µF	20%	10V		
2130©	5322 122 32654	22nF	10%	63V		
2131©	4822 126 13482	470nF	20%	16V		
2132©	4822 126 13482	470nF	20%	16V		
2133	4822 124 21913	1µF	20%	63V		
2134©	3198 017 31530	15nF	10%	50V		not USA
2134©	5322 122 32654	22nF	10%	63V		USA only
2135©	3198 017 31530	15nF	10%	50V		not USA
2135©	3198 017 32230	22nF	10%	25V		USA only
2136©	4822 126 14076	220nF	20%	25V		
2137©	4822 126 14076	220nF	20%	25V		
2138	4822 124 22652	2,2µF	20%	50V		
2139©	4822 126 14236	15pF	5%	50V		
2140©	4822 126 13695	82pF	1%	63V		
2141©	4822 126 13838	100nF	10%	50V		
2143©	4822 126 14076	220nF	20%	25V		
2144	4822 124 21913	1µF	20%	63V		
2145©	4822 122 33575	220pF	5%	50V		
2146©	4822 122 33575	220pF	5%	50V		
2147©	4822 122 33575	220pF	5%	50V		
2148©	4822 122 33127	2,2nF	10%	63V		
2149©	5322 122 32659	33pF	5%	50V		RDS only
2150©	4822 126 13838	100nF	10%	50V		
2159©	5322 122 31151	22µF	20%	50V		
2163©	4822 126 13838	100nF	10%	50V		LW only
2164©	4822 126 13482	470nF	20%	16V		
2165©	4822 126 13838	100nF	10%	50V		
2166©	5322 122 31647	1nF	10%	63V		
2167©	4822 122 33926	12pF	5%	50V		
2169©	4822 122 33127	2,2nF	10%	63V		RDS only
2180©	3198 017 31030	10nF	10%	50V		
2190©	4822 126 13838	100nF	10%	50V		
2191	4822 124 40178	100µF	20%	10V		

RESISTORS

3105©	4822 117 11503	220Ω	5%	0,1W		
3108©	4822 117 11449	2,2kΩ	1%	0,1W		LW only
3109©	4822 051 20472	4,7kΩ	5%	0,1W		LW only
3123©	4822 051 20472	4,7kΩ	5%	0,1W		LW only
3125©	4822 117 10833	10kΩ	1%	0,1W		LW only
3128©	4822 117 11449	2,2kΩ	1%	0,1W		LW only
3130©	3198 021 38210	820Ω	5%	0,06W		
3131©	3198 021 38210	820Ω	5%	0,06W		
3132©	4822 051 20479	47Ω	5%	0,1W		
3134©	4822 051 20223	22kΩ	5%	0,1W		
3135©	3198 021 31020	1kΩ	5%	0,06W		
3137©	4822 051 20223	22kΩ	5%	0,1W		LW only
3141©	4822 117 11148	56kΩ	1%	0,1W		
3142	4822 100 12159	TRIMPOT. 100kΩ				
3143©	4822 051 20223	22kΩ	5%	0,1W		RDS only
3144©	4822 051 10102	1kΩ	2%	0,25W		RDS only
3145©	4822 117 11449	2,2kΩ	1%	0,1W		
3146©	4822 051 20229	22Ω	5%	0,1W		
3150©	4822 117 10833	10kΩ	1%	0,1W		
3151©	4822 051 20683	68kΩ	5%	0,1W		
3152©	4822 051 20471	470Ω	5%	0,1W		
3153©	4822 051 20471	470Ω	5%	0,1W		
3154©	4822 117 13577	330Ω	1%	0,1W		
3155©	4822 117 10353	150Ω	5%	0,1W		
3156©	4822 117 10837	100kΩ	1%	0,1W		
3157©	4822 117 10837	100kΩ	1%	0,1W		
3158©	4822 051 20471	470Ω	5%	0,1W		
3159©	4822 051 20471	470Ω	5%	0,1W		
3160©	4822 051 20471	470Ω	5%	0,1W		
3161©	4822 051 20223	22kΩ	5%	0,1W		
3167©	4822 051 20121	120Ω	5%	0,1W		
3168©	4822 051 20121	120Ω	5%	0,1W		
3169©	4822 051 20154	150kΩ	5%	0,1W		
3170©	4822 117 10837	100kΩ	1%	0,1W		
3171©	4822 117 10834	47kΩ	1%	0,1W		
3172©	4822 051 20562	5,6kΩ	5%	0,1W		
3176©	4822 051 20333	33kΩ	5%	0,1W		RDS only
3180©	4822 117 10833	10kΩ	1%	0,1W		LW only
3190©	4822 051 20121	120Ω	5%	0,1W		
3191©	4822 051 20121	120Ω	5%	0,1W		
3192©	4822 117 13577	330Ω	1%	0,1W		
3193©	4822 117 13577	330Ω	1%	0,1W		
3194©	4822 117 11449	2,2kΩ	1%	0,1W		
3195©	4822 051 20101	100Ω	5%	0,1W		
4101©	4822 051 20008	CHIP JUMPER 0805				FM/AM only
4102©	4822 051 20008	CHIP JUMPER 0805				FM/AM only
4104©	4822 051 20008	CHIP JUMPER 0805				FM/AM only
4105©	4822 051 20008	CHIP JUMPER 0805				
4106©	4822 051 20008	CHIP JUMPER 0805				
4107©	4822 051 20008	CHIP JUMPER 0805				

COILS

5102	4822 157 71634	RF-COIL MW	
5103	2422 549 44107	RF-COIL LW	LW only
5109	4822 157 71639	FM-IF FILTER 10,7MHz	
5110	4822 242 70665	FM-IF FILTER 10,7MHz	
5111	2422 549 44023	AM-IF FILTER 450kHz	
5112	4822 157 70302	AM-IF FILTER 450kHz	
5114	4822 157 70302	AM-IF FILTER 450kHz	
5115	4822 157 71636	ANTI BIRDY FILTER	
5118©	2422 535 95881	100nH	
5119	4822 157 11443	DISCRIMINATOR COIL	
5121	4822 242 10261	QUARTZ 75kHz	
5122	2422 549 44108	RF-COIL, LW-OSCILLATOR	LW only
5123	2422 549 44108	RF-COIL, MW-OSCILLATOR	

DIODES

6105©	4822 130 83075	HN1V02H	
6106©	4822 130 83757	BAS216	
6107©	9340 386 90115	BZX284-C11	
6120©	4822 130 83757	BAS216	

TRANSISTORS

7103©	5322 130 42756	BC857C	RDS only
7104	9322 003 64676	TBC337-40	LW only
7105	9322 003 64676	TBC337-40	LW only
7109©	4822 130 60373	BC856B	LW only
7110©	4822 130 60373	BC856B	
7111©	5322 130 42755	BC847C	
7112	4822 130 44503	BC547C	
7122©	5322 130 42755	BC847C	LW only
7124©	5322 130 42755	BC847C	LW only

INTEGRATED CIRCUITS

7101	4822 209 90315	TEA5762H/V1, RADIO IC

MAINS BOARD

TABLE OF CONTENTS

Brief introduction 8-1
Mains Socket - Circuit diagram & Component layout 8-1
Mains Board - Component layout 8-2
Mains Board - Chip layout 8-3
Mains Board - Circuit diagram 8-4
Electrical parts list 8-5

Brief introduction of the Mains Board

ECO Power
Standby Transformer 5203 provides the LPS supply to control the relay 1210, cutting of the Mains supply to the Mains transformer during the ECO Power (standby) mode.

The Mains transformer provides the following:
- 5V6_ECO for Low Power Supply
- +A, +A/2 and +B to the Combi board

MAINS SOCKET - CIRCUIT DIAGRAM & COMPONENT LAYOUT

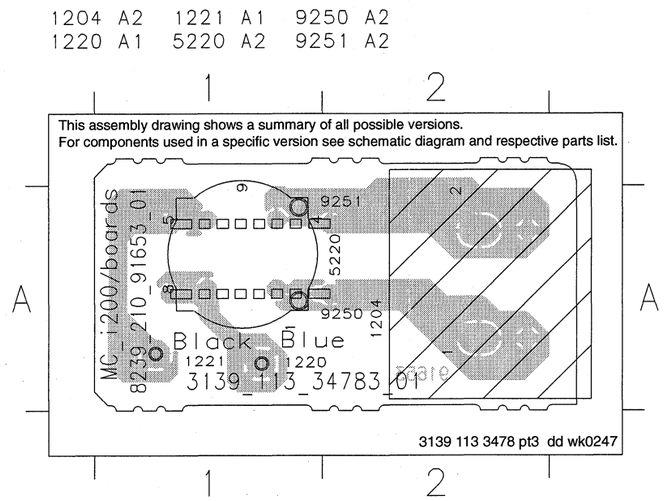

1204 A1 1220 A2 1221 A2 5220 A1 9250 A1 9251 A1

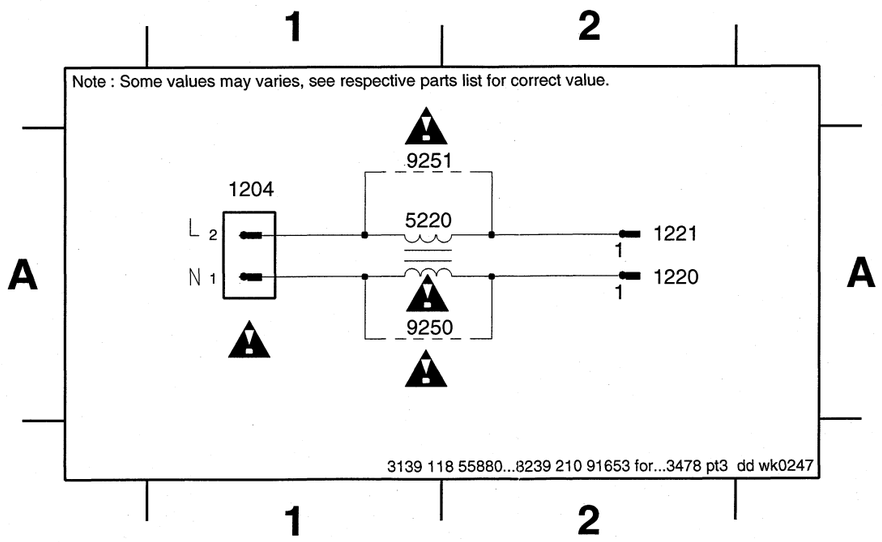

8-2

MAINS BOARD - COMPONENT LAYOUT

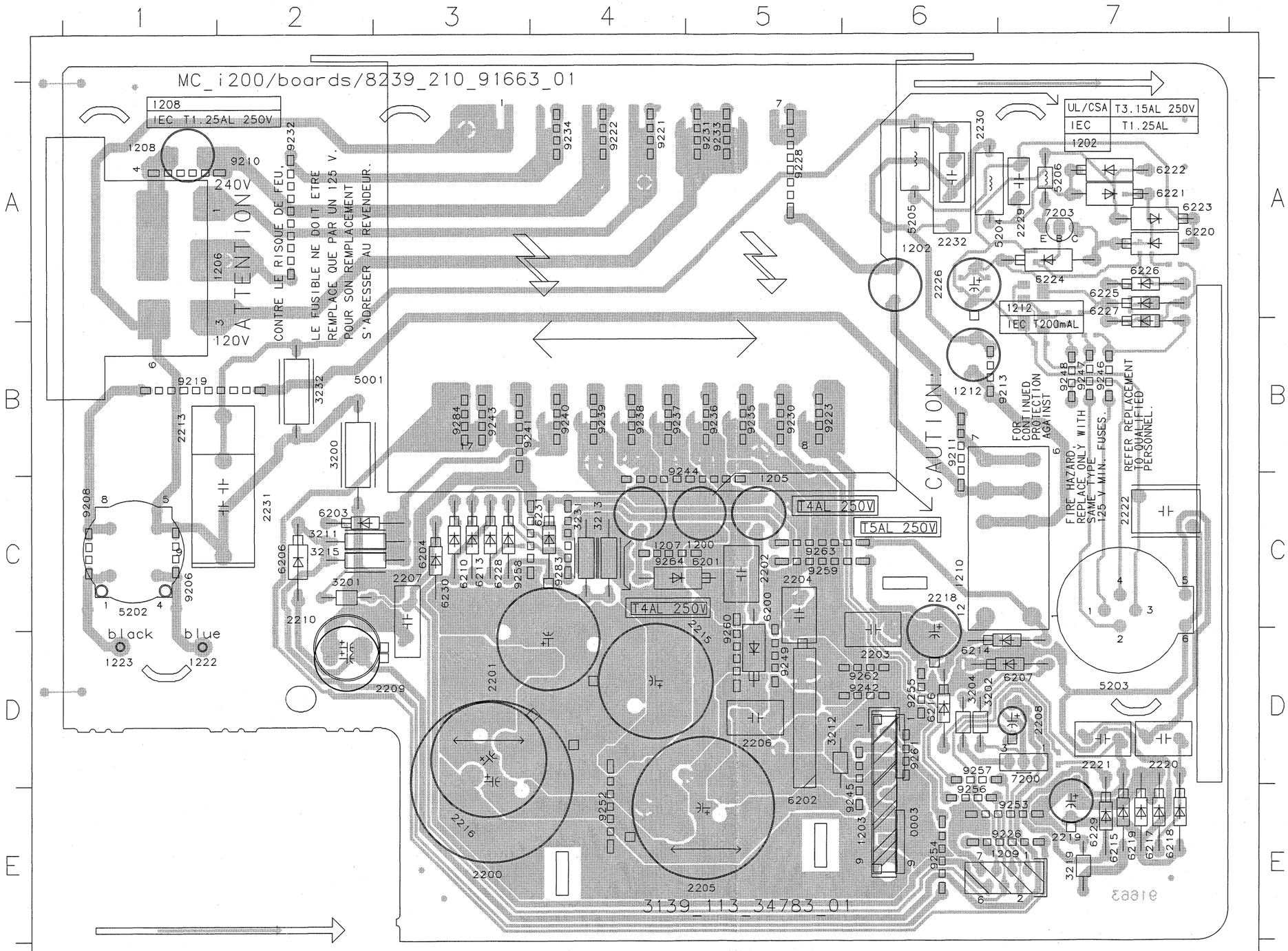

This assembly drawing shows a summary of all possible versions. For components used in a specific version see schematic diagram and respective parts list.

3139 113 3478 pt3 dd wk0247

0003	E6	9211	B6
1200	C5	9213	B7
1202	A6	9219	B1
1203	E6	9221	A4
1205	C5	9222	A4
1206	A2	9223	B5
1207	C4	9226	E7
1208	A1	9228	A5
1209	E7	9230	B5
1210	C6	9231	A5
1212	B6	9232	A2
1222	D1	9233	A5
1223	D1	9234	A4
2200	E3	9235	B5
2201	D3	9236	B5
2202	C5	9237	B4
2203	D6	9238	B4
2204	C5	9239	B4
2205	E5	9240	B4
2206	D5	9241	B3
2207	C3	9242	D6
2208	D7	9243	B3
2209	D3	9244	B4
2210	C2	9245	E6
2213	B1	9246	B7
2215	D5	9247	B7
2216	E3	9248	B7
2218	C6	9249	D5
2219	E7	9252	E4
2220	D7	9253	E7
2221	D7	9254	E6
2222	C7	9255	D6
2225	A6	9256	E6
2229	A7	9257	D6
2230	A6	9258	C3
2231	C2	9259	C5
2232	A6	9260	C5
3200	B2	9261	D6
3201	C2	9262	D6
3202	D6	9263	C5
3204	D6	9264	C4
3211	C2	9283	C4
3212	D5	9284	B3
3213	C4		
3215	C2		
3219	E7		
3231	C4		
3232	B2		
5001	B2		
5202	C1		
5203	D7		
5204	A7		
5205	A6		
5206	A7		
6200	C5		
6201	C5		
6202	E5		
6203	C2		
6204	C3		
6206	C2		
6207	D7		
6210	C3		
6213	C3		
6214	D6		
6215	E7		
6216	D6		
6217	E7		
6218	E7		
6219	E7		
6220	A7		
6221	A7		
6222	A7		
6223	A7		
6224	A7		
6225	A7		
6226	A7		
6227	A7		
6228	C3		
6229	E7		
6230	C3		
6231	C4		
7200	D7		
7203	A7		
9206	C1		
9208	C1		
9210	A2		

8-3

MAINS BOARD - CHIP LAYOUT

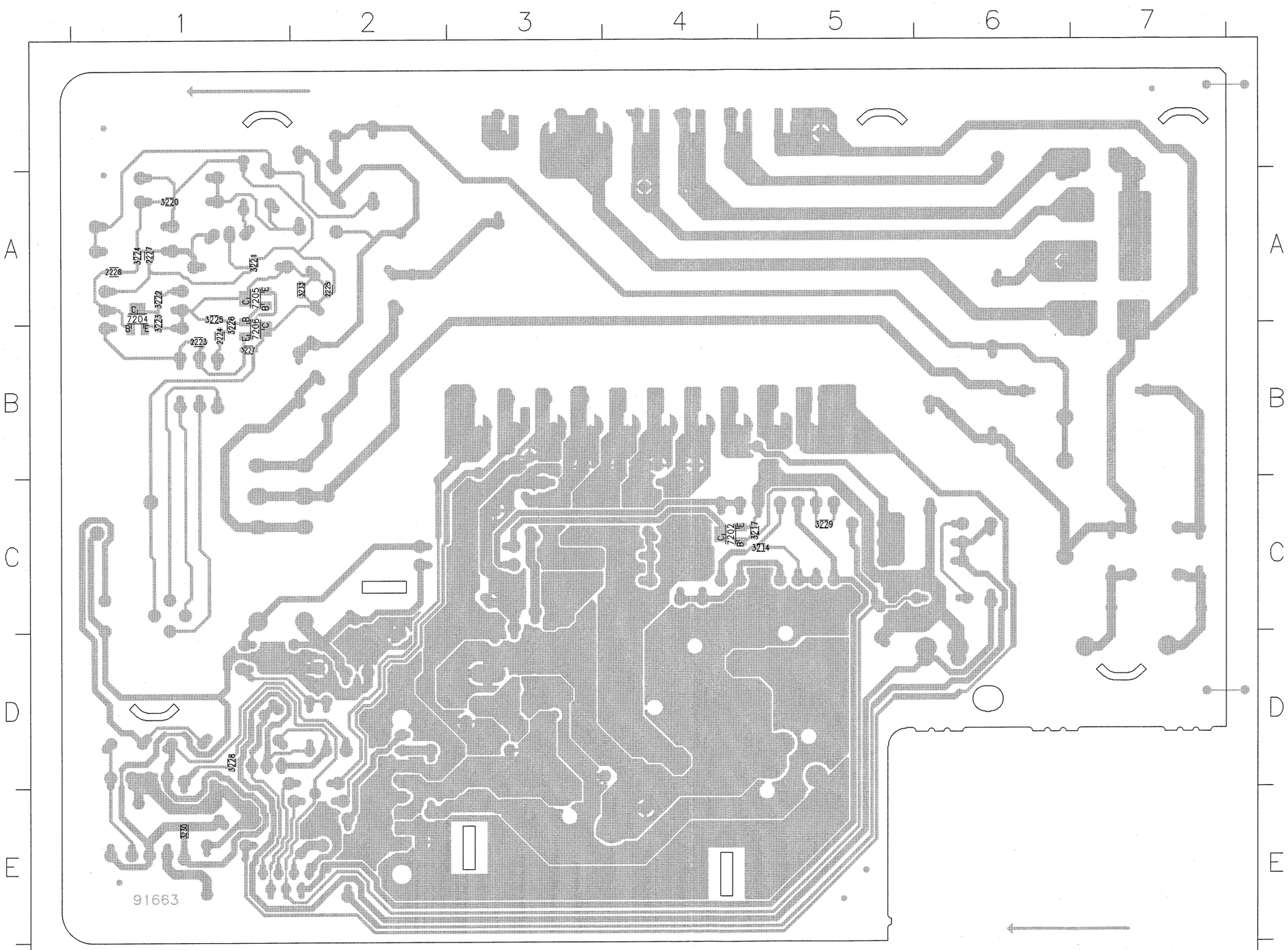

2223	B1
2224	B1
2225	A2
2227	A1
2228	A1
3214	C5
3217	C4
3220	A1
3221	A1
3222	A1
3223	A1
3224	A1
3225	A1
3226	B1
3227	B1
3228	D1
3229	C5
3230	E1
3233	A2
7202	C4
7204	A1
7205	A1
7206	B1

This assembly drawing shows a summary of all possible versions. For components used in a specific version see schematic diagram and respective parts list.

3139 113 3478 pt3 dd wk0247

8-4

MAINS BOARD - CIRCUIT DIAGRAM

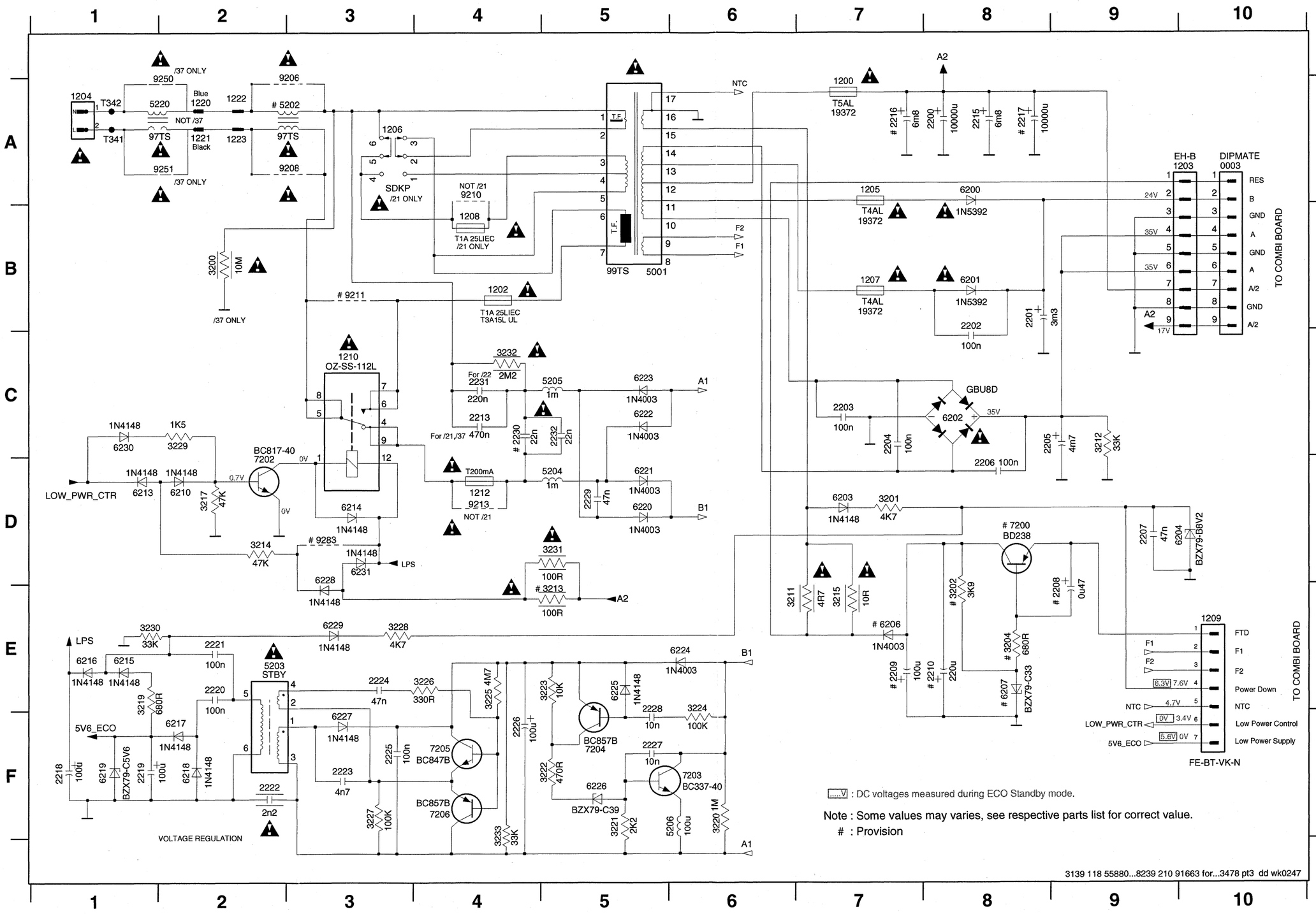

0003 A10
1200 A7
1202 B4
1203 A9
1205 A7
1206 A3
1207 B7
1208 B4
1209 E10
1210 C3
1212 D4
1222 A2
1223 A2
2200 A8
2201 B8
2202 B8
2203 C7
2204 C7
2205 C8
2206 D8
2207 D9
2208 E9
2209 E7
2210 E8
2213 C4
2215 A8
2216 A7
2217 A8
2218 F1
2219 F1
2220 E2
2221 E2
2222 F2
2223 F3
2224 E3
2225 F3
2226 F4
2227 F5
2228 E5
2229 D5
2230 C4
2231 C4
2232 C5
3200 B2
3201 D7
3202 E8
3204 E8
3211 E6
3212 C9
3213 E5
3214 D2
3215 E7
3217 D2
3219 E1
3220 F6
3221 F5
3222 F5
3223 E5
3224 F6
3225 E4
3226 E4
3227 F3
3228 E3
3229 C2
3230 E1
3231 D5
3232 C4
3233 F4
5001 B5
5202 A3
5203 E3
5204 D5
5205 C5
5206 F6
6200 A8
6201 B8
6202 C8
6203 D7
6204 D9
6206 E7
6207 E8
6210 D2
6213 D1
6214 D3
6215 E1
6216 E1
6217 F2
6218 F2
6219 F1
6220 D5
6221 D5
6222 C5
6223 C5
6224 E6
6225 E5
6226 F5
6227 F3
6228 D3
6229 E3
6230 C1
6231 D3
7200 D8
7202 D2
7203 F6
7204 E5
7205 F4
7206 F4
9206 A3
9208 A3
9210 A4
9211 B3
9213 D4
9283 D3

ELECTRICAL PARTS - MAINS BOARD

1104		2822 031 01494	FAN 12VDC 0.8W 3100RPM
1200	⚠	2422 086 10963	FUSE RAD LT 5A 250V IEC A
1202	⚠	4822 071 51252	FUSE 1.25A
1204	⚠	4822 265 31015	AC POWER SOCKET
1205	⚠	2422 086 10786	FUSE RAD 372 LT4A 250V
1207	⚠	2422 086 10786	FUSE RAD 372 LT4A 250V
1210	⚠	9940 000 02118	POWER RELAY 2P 12VDC 16A
3211	⚠	4822 052 10478	4R70 5% 0,33W
3215	⚠	4822 052 10109	10R00 5% 0,33W
3231	⚠	4822 052 10101	100R00 5% 0,33W
5001	⚠	3103 308 30780	TRAFO MAINS P2001 2X45W
5203	⚠	2422 549 45157	TRAFO STANDBY 3A1631N
5220	⚠	4822 157 11832	FILTER 400UH 3A
6202	⚠	4822 130 11139	BRIDGE DIODE GBU8D
		9940 000 02126	FFC CABLE 7P L=220MM

Note: Only these parts mentioned in the list are normal service parts.

ETF8 TAPE MODULE

TABLE OF CONTENTS

Connector assignment 9-1
Tape Module Wiring 9-2
Tape Mechanism electronics 9-2
Tape adjustment / Check Table 9-3
HEF4094BT Functional Block & Application Logic Table ... 9-3
ETF8 Board layouts - Components & Chips 9-4
ETF8 Circuit diagram 9-5
Exploded Views & mechanical parts list 9-6
Electrical parts list 9-8

CONNECTORS ASSIGNMENTS:

CONNECTOR 1701		INTERCONNECTION TO AF BOARD
1	REC-L	Record input left
2	REC-R	Record input right
3	GND A	AF Ground
4	TAPE-L	Playback output left
5	+12V	D.C. supply (+12V) for AF electronics
6	TAPE-R	Playback output right
7	-CMOS	Negative d.c. supply (-9V) for controlling JFET J111

CONNECTOR 1703		INTERCONNECTION TO AF BOARD
1	GND M	Motor Ground
2	+MOTOR	D.C. supply (+12V) for tape deck motor & solenoid

CONNECTOR 1706		INTERCONNECTION TO FRONT BOARD
1	CR_IN	Deck sensing Chrome Tape
2	AD1	Deck sensing switches output voltage / Deck EOT
3	+5V	DC supply (+5V) for deck status ADC network (ref to microprocessor's supply)
4	GND _P	Control & Oscillator Ground
5	CLK	HEF4094BT shift register Clock line
6	DATA	HEF4094BT shift register Data line
7	STROBE	HEF4094BT shift register Strobe line

CONNECTOR 1710		TAPE HEAD CONNECTIONS
1	GND A	Erase Head ground
2	ERASE HEAD	Erase Head
3	R/P HD Rch	R/P Head right channel positive
4	Common	Pb Head return ground shield
5	R/P HD Lch	R/P Head left channel positive

CONNECTOR 1760		DECK CONTROL INTERFACE
1	Vcc 12V	Deck / Motor supply
2	PHOTO	Photo sensor output (tape movement indication)
3	GND_M	Deck / Motor ground
4	MODE	Mode switch (head engagement)
5	Sol_supply	Solenoid supply
6	CR_IN	Chrome tape detection switch
7	REC FWD	Record tab protection status switch (forward)
8	REC REW	Record tab protection status switch (reverse)

TAPE DECK WIRING

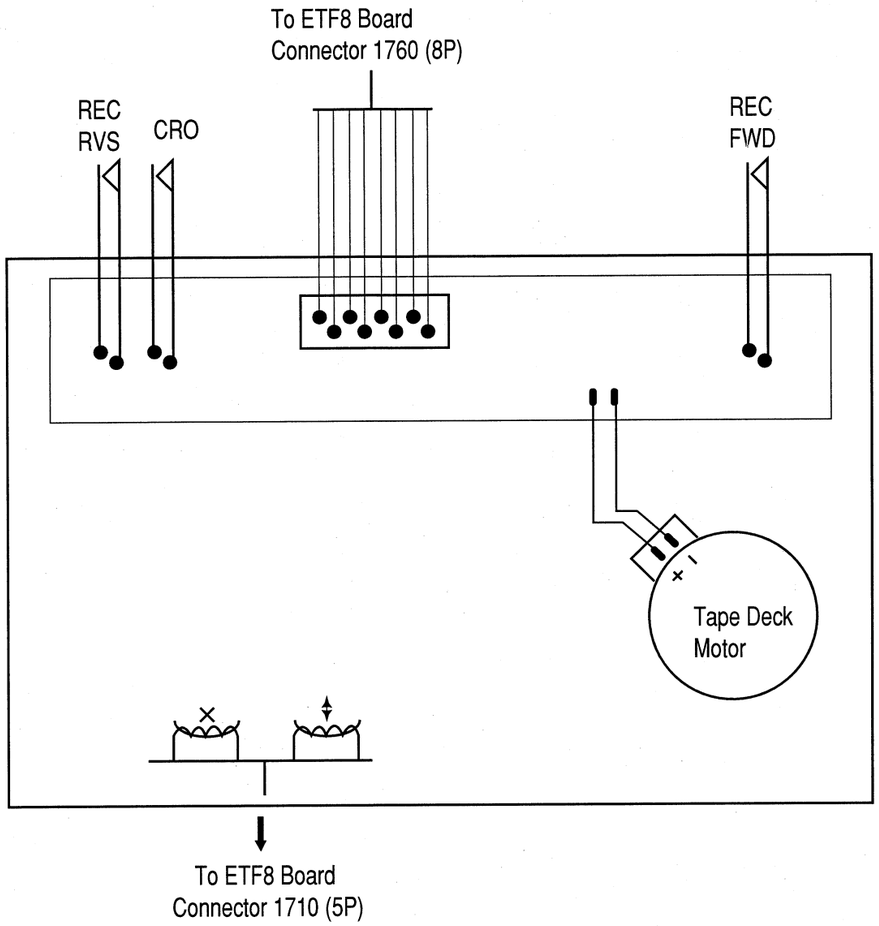

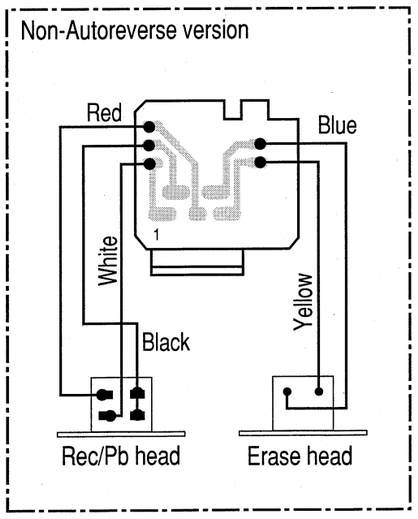

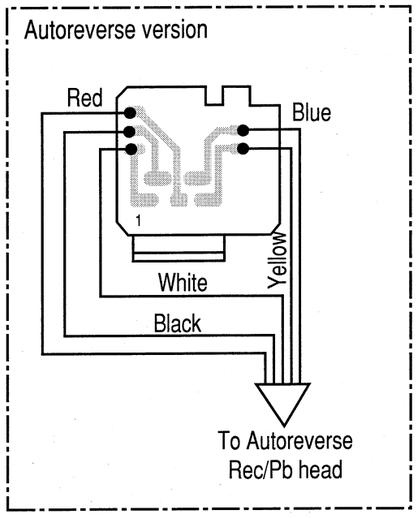

TAPE MECHANISM ELECTRONICS

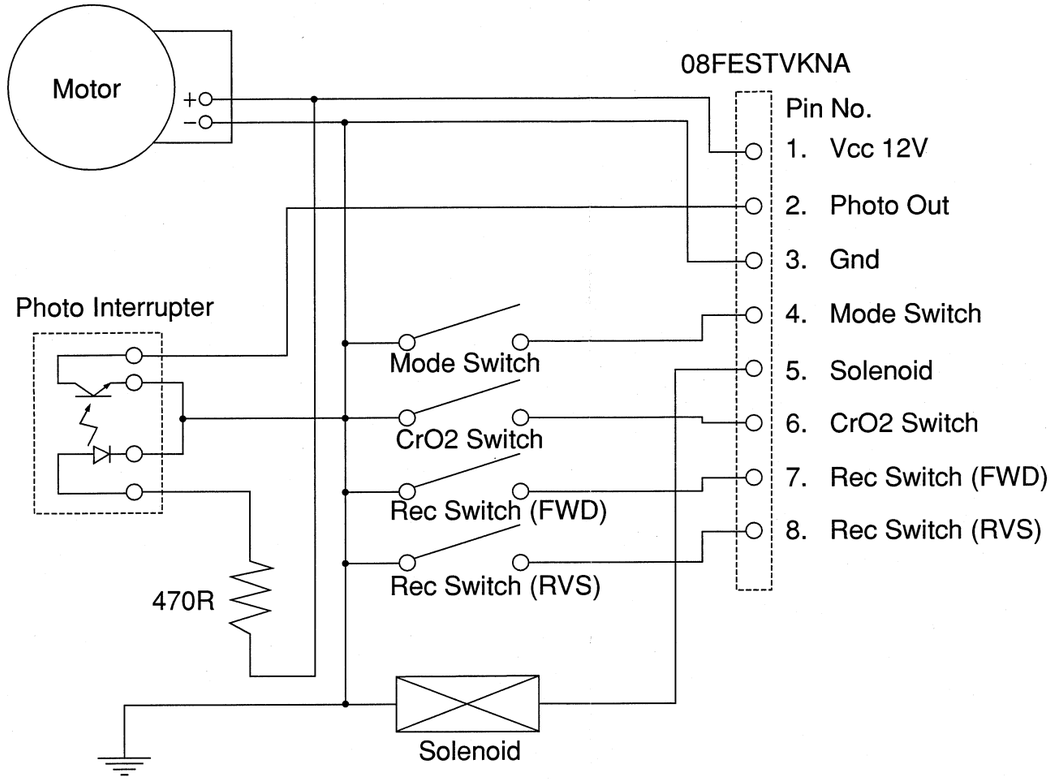

9-3

TAPE ADJUSTMENT & CHECK TABLE

	TEST CASSETTE	RECORDER MODE	MEASURE ON	READ ON	ADJUST with	ADJUST to
MOTOR SPEED	SBC420 3150Hz	PLAY	1 or 2 LEFT RIGHT	frequency counter	check	3150Hz +/- 2%
WOW & FLUTTER	SBC420 3150Hz	PLAY		W&F-meter	check	< 0.4 % DIN
ADJUST AZIMUTH	SBC420 10kHz	PLAY FWD		mV-meter	left hand screw	max. output level & left=right
		PLAY REV ^			right hand screw	
PLAYBACK FREQ. RESPONSE	SBC420	PLAY		mV-meter	check	limits see fig. 1 *
CHECK RECORD/PLAYBACK FREQUENCY AND DISTORTION						
Inject 8.85mV signals 100Hz, 250Hz, 1kHz, 10kHz, 12.5kHz via 3 or 4	SBC419A or SBC420	RECORD				
	RECORDED CASSETTE	PLAY	1 or 2 LEFT RIGHT	mV-meter	check	limits see fig. 2 *
Inject 1kHz 28mV via 3 or 4	SBC419A or SBC420	RECORD				
	RECORDED CASSETTE	PLAY	1 or 2 LEFT RIGHT	THD-meter	check	< 3% *

SBC419A : 4822 397 30069
SBC420 : 4822 397 30071

^ For Auto-reverse version only
* If high frequencies are not within limits, decrease bias and re-measure. If distortion is too high, increase bias and re-meaure

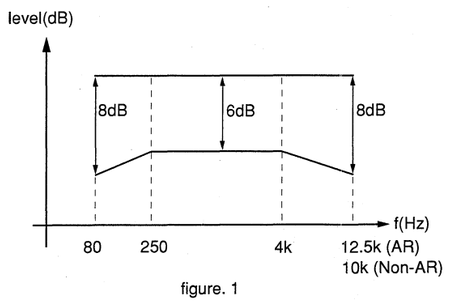

figure. 1

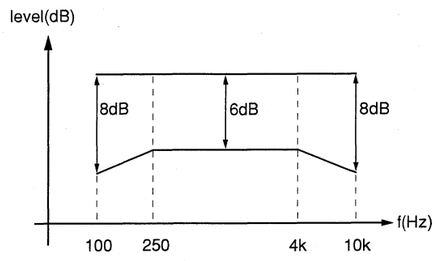

figure. 2

HEF4094BT FUNCTIONAL BLOCK DIAGRAM

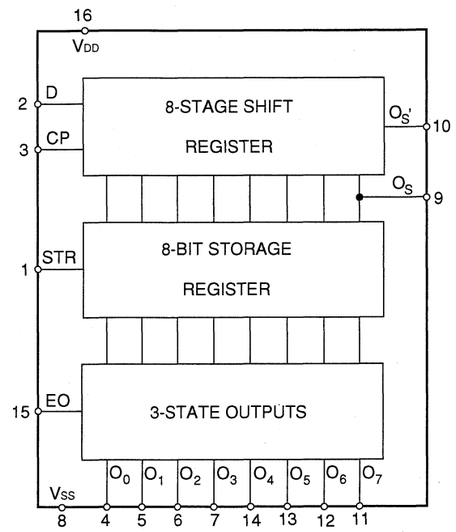

AF Control Logic State Table

State of Module	Control lines from HEF4094BT							
	O_0	O_1	O_2	O_3	O_4	O_5	O_6	O_7
	CR_SEL	REC	BIAS_OFF	CR_BIAS		SOL	MUTE_OFF	MOT
Stop	0	0	1	X	Not in used	Deck Mechanism Timing	0	0
Playback (Ferro)	0	0	1	0			1	1
Playback (Chrome)	1	0	1	1			1	1
Record (Ferro)	0	1	0	0			0	1
Record (Chrome)	1	1	0	1			0	1
FWD	0	0	1	X			0	1
REW	0	0	1	X			0	1

Note: 0 = Logic Low
1 = Logic High
X = Not applicable

COMPONENT LAYOUT

1701 A2	2715 A3	2795 A2	6612 A1	6777 B2	9704 A3
1703 A1	2716 A3	2796 B2	6770 B2	6778 B2	9705 A3
1706 A1	2761 A2	2797 A2	6771 B2	7782 B3	9706 B3
1710 A3	2768 A2	2798 A2	6772 B3	7786 A3	
1760 A1	2780 B1	3778 B2	6773 A3	9701 B2	
2713 A3	2784 A3	5701 A3	6774 B3	9702 B1	
2714 A2	2785 B2	5703 B3	6776 B2	9703 A3	

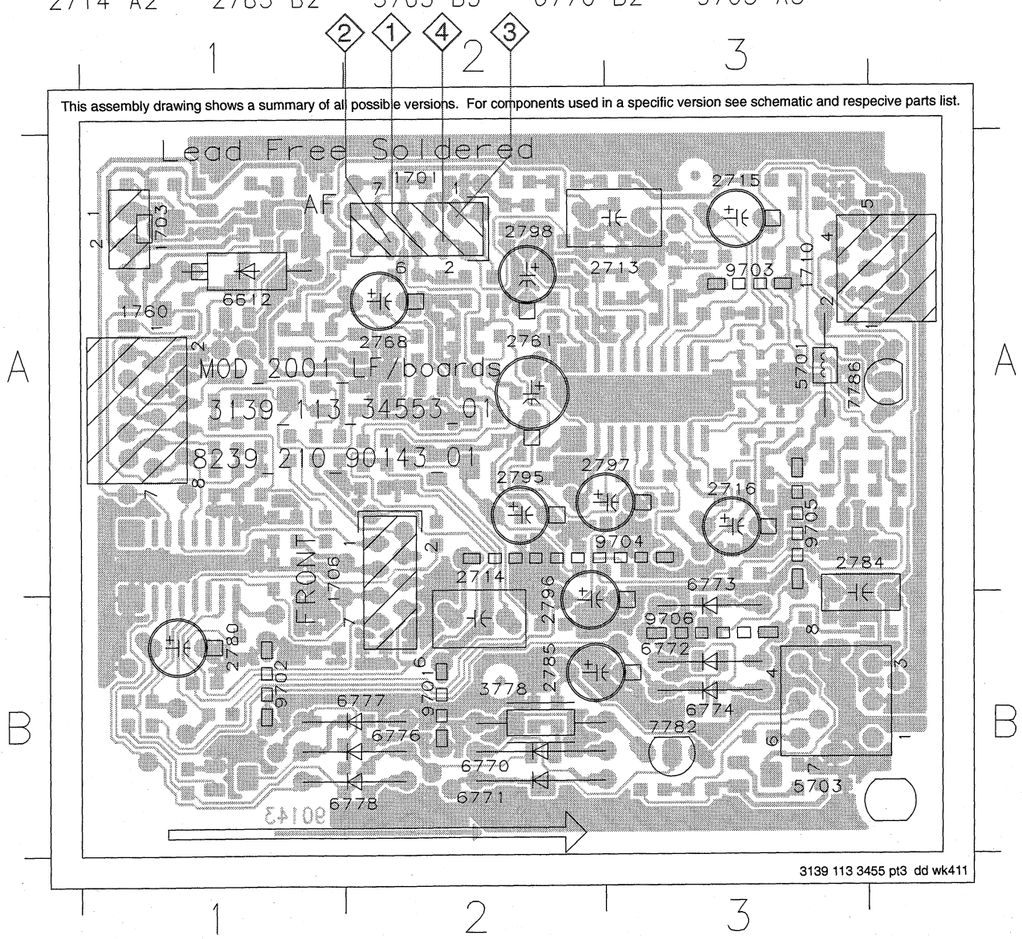

CHIP LAYOUT

2621 B3	2732 A1	3630 A3	3745 A3	3796 A2	4735 A2
2622 B3	2743 B1	3678 A3	3746 A3	3797 A3	4736 A1
2623 A3	2747 A2	3680 A3	3749 A1	3800 B3	4737 A1
2625 A3	2769 A2	3686 A3	3750 A1	4701 A2	4738 A1
2701 A1	2770 A3	3709 A1	3762 B2	4702 A3	4739 A1
2702 A1	2781 B1	3710 A1	3764 A2	4705 A2	4741 A2
2703 A2	2782 B1	3711 A1	3768 A2	4707 B2	4746 A1
2704 A2	2786 B1	3712 A1	3769 B2	4708 A2	4747 A1
2709 A1	2787 B1	3717 A1	3770 B2	4709 A3	7610 A3
2710 A1	2788 A2	3718 A1	3771 B2	4710 A3	7612 A3
2711 A1	2789 A1	3719 A1	3772 B3	4711 A3	7614 A3
2712 A2	2790 A1	3720 A1	3774 B2	4712 A3	7618 A3
2717 A1	2791 A1	3721 A1	3775 B1	4718 A2	7620 A3
2718 A1	2793 A1	3722 A1	3776 B1	4719 A2	7624 A3
2719 A1	2794 A1	3723 A1	3777 B1	4720 A2	7720 A1
2720 A1	2799 A2	3724 A1	3779 B1	4721 B2	7780 B3
2721 A1	3607 A3	3733 A2	3780 B1	4723 A2	7781 B1
2722 A1	3608 A3	3734 A1	3781 A1	4725 A2	7783 B2
2723 A1	3609 A3	3735 A2	3786 B3	4726 A2	7784 B1
2724 A1	3610 A3	3736 A2	3789 B2	4727 B3	7788 A2
2725 A3	3611 A3	3737 A2	3790 A2	4729 A1	7789 A2
2727 A1	3612 A3	3738 A3	3791 A1	4730 A1	7790 A2
2728 A1	3614 A3	3739 A3	3792 B3	4731 B2	7792 A2
2729 A1	3624 A3	3740 A3	3793 A2	4732 A2	7793 A1
2730 A1	3626 A3	3743 A2	3794 A1	4733 A2	7794 A1
2731 A1	3628 A3	3744 A3	3795 A1	4734 A2	

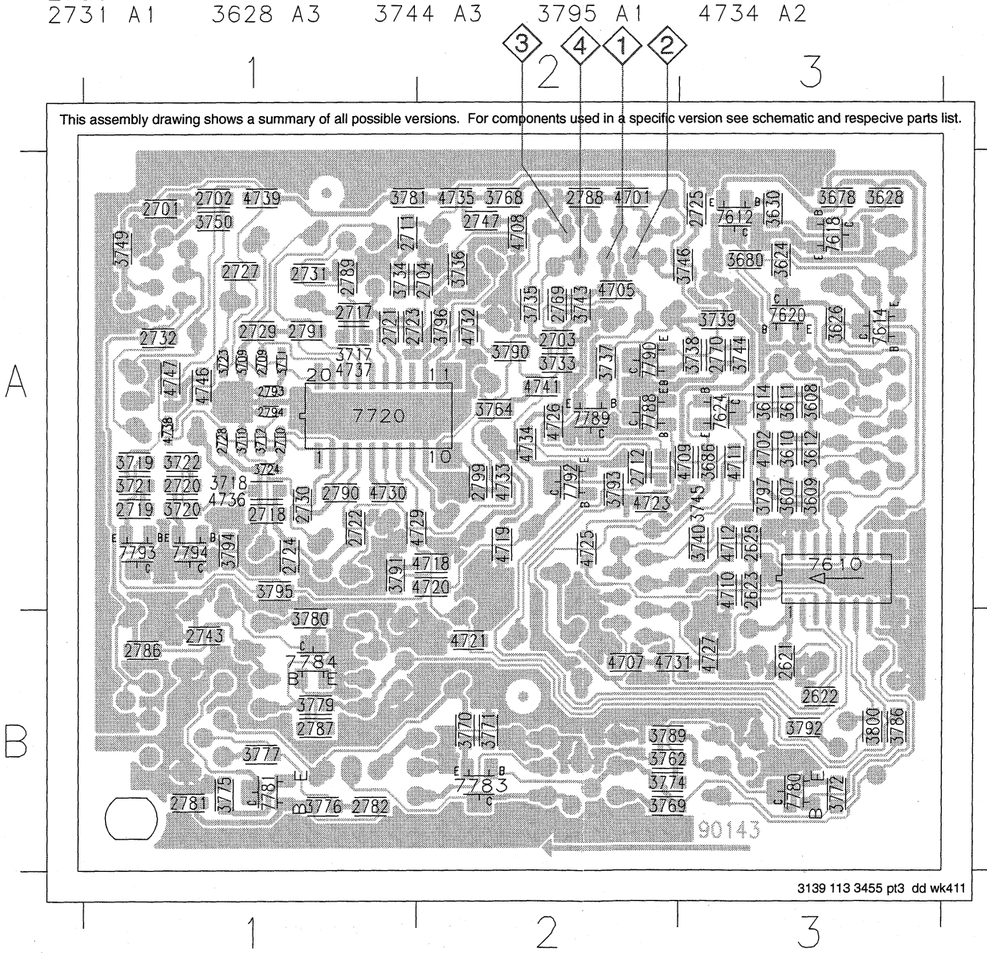

9-5

CIRCUIT DIAGRAM

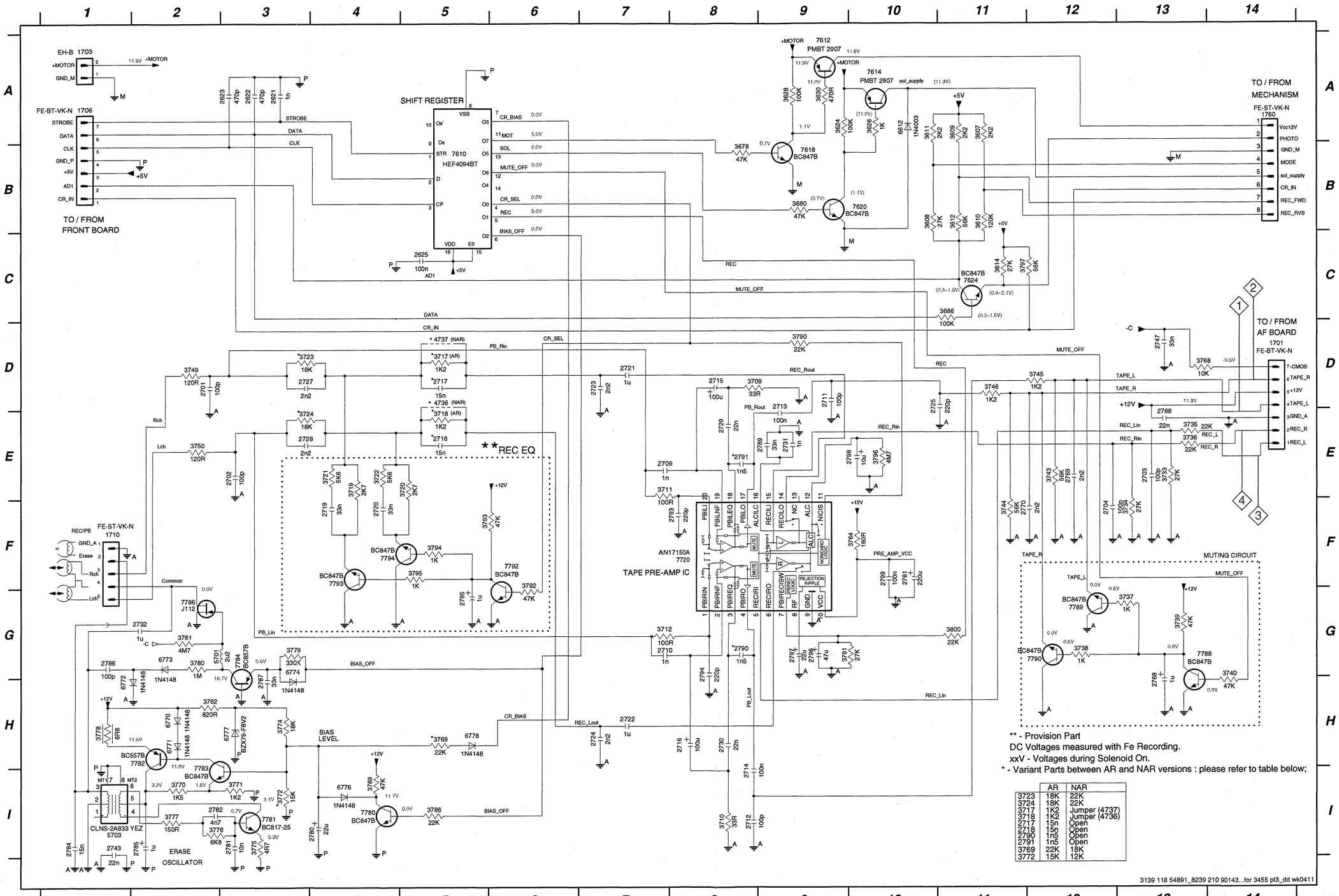

** - Provision Part
DC Voltages measured with Fe Recording.
xxV - Voltages during Solenoid On.
* - Variant Parts between AR and NAR versions : please refer to table below;

	AR	NAR
3723	18K	22K
3724	18K	22K
3717	1K2	Jumper (4737)
3718	1K2	Jumper (4736)
2717	15n	Open
2719	15n	Open
2790	1n5	Open
2791	1n5	Open
3769	22K	18K
3772	15K	12K

3139 118 54891_8239 210 90143...for 3455 pt3_dd wk0411

1701 D14
1703 A1
1706 A1
1710 F1
1760 A14
2621 A3
2622 A3
2623 A3
2625 C5
2701 D2
2702 E3
2703 E13
2704 F12
2709 E7
2710 G7
2711 D9
2712 I8
2713 D9
2714 I8
2715 D8
2716 H8
2717 D5
2718 E5
2719 F4
2720 F4
2721 D7
2722 H7
2723 D7
2724 H7
2725 D10
2727 D3
2728 E3
2729 E8
2730 H8
2731 E9
2732 G2
2743 I1
2747 D13
2761 F10
2768 H13
2769 E12
2770 F11
2780 I4
2781 I3
2782 I2
2784 I1
2785 I2
2786 G1
2787 H3
2788 E13
2789 E9
2790 G8
2791 E8
2793 F8
2794 G8
2795 G5
2796 G9
2797 G9
2798 E9
2799 F10
3607 A11
3608 B10
3609 A11
3610 B11
3611 A10
3612 B11
3614 C11
3624 A9
3626 A10
3628 A9
3630 A9
3678 B8
3680 B9
3686 C11
3709 D8
3710 I8
3711 E7
3712 G7
3717 D5
3718 E5
3719 E4
3720 E5
3721 E4
3722 E4
3723 D3
3724 E3
3733 E13
3734 F13
3735 E13
3736 E13
3737 G13
3738 G12
3739 G13
3740 G14
3743 E12
3744 F11
3745 D12
3746 D11
3749 D2
3750 E2
3762 H2
3764 F10
3768 D13
3769 H5
3770 I2
3771 I3
3772 I3
3774 H3
3775 I3
3776 I2
3777 I2
3778 H1
3779 G3
3780 G2
3781 G2
3786 I5
3789 I4
3790 D9
3791 G9
3792 F6
3793 F5
3794 F5
3795 F5
3796 E10
3797 C11
3800 G11
4736 D5
4737 D5
5701 G2
5703 I1
6612 A10
6770 H2
6771 H2
6772 H1
6773 G2
6774 G3
6776 I4
6777 H3
6778 H5
7610 B5
7612 A9
7614 A10
7618 B9
7620 B10
7624 C11
7720 F8
7780 I4
7781 I3
7782 H2
7783 I2
7784 G3
7786 G2
7788 G14
7789 G12
7790 G12
7792 F6
7793 F4
7794 F4

AUTOREVERSE (AR) TAPE MECHANISM

MECHANICAL PARTS LIST - AUTOREVERSE TAPE MECHANISM

1	9965 000 10041	Rec/Pb Head assembly
7	9965 000 10042	Cap Pinch R
8	9965 000 10043	Cap Pinch L
9	9965 000 10044	Roller Pinch
32	9965 000 10045	Solenoid assembly
34	9965 000 10046	Motor Assembly
36	9965 000 07441	Belt-SR
37	9965 000 07442	Belt-FR
39	9965 000 10047	Flex Socket 5pin Hort.
40-2	9965 000 10048	Flex Socket 8pin Hort.
40-3	9965 000 10049	Mode Switch
40-4	4822 116 83883	470R 5% 0,5W
40-5	9965 000 10050	Spacer
40-6	9965 000 10051	Photo Interrupter
40-7	9965 000 07443	Box Switch
40-8	9965 000 10052	Spring Sw
61	9965 000 10053	Spring
62	9965 000 10054	Spring

Note: Only the parts mentioned in this list are normal service spare parts.

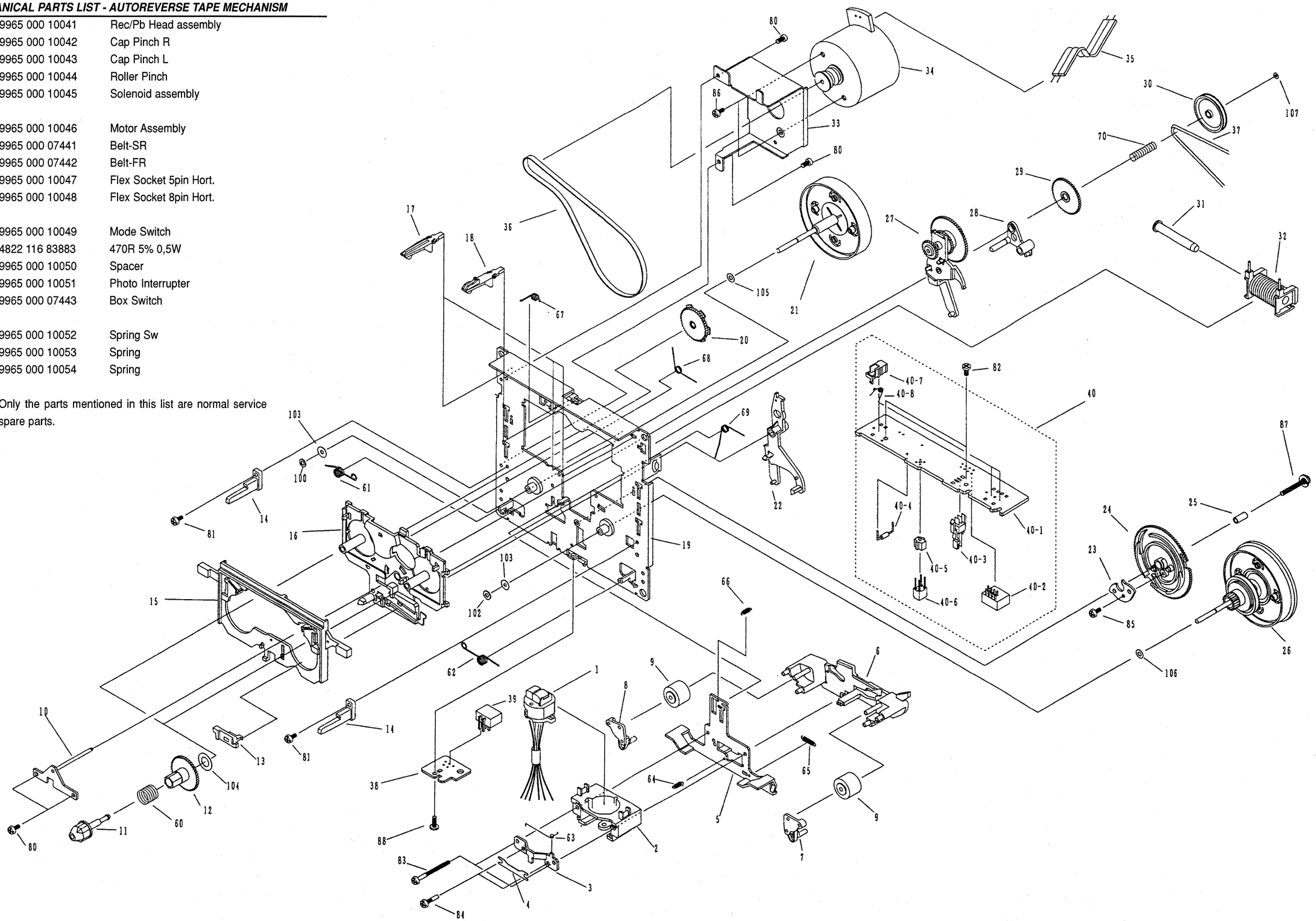

9-6

NON-AUTOREVERSE (NAR) TAPE MECHANISM

MECHANICAL PARTS LIST - NON-AUTOREVERSE TAPE MECHANISM

1	9965 000 12110	Play Head
2	9965 000 02600	Erase Head
7	9965 000 10042	Cap Pinch Roller
9	9965 000 10044	Roller Pinch
32	9965 000 07439	Solenoid Assy
34	9965 000 10046	Assembly Motor
36	9965 000 12114	Belt SF
37	9965 000 07442	Belt FR
39	9965 000 12115	Flex Socket 5pin Hort.
40-2	4822 265 11535	Flex Socket 8pin Hort.
40-3	9965 000 10049	Mode Switch
40-4	4822 116 83883	470R 5% 0,5W
40-5	9965 000 12116	Spacer
40-6	9965 000 10051	Photo Interrupter
40-7	9965 000 07443	Box Switch
40-8	9965 000 10052	Spring Sw
61	9965 000 10053	Spring
62	9965 000 10054	Spring

Note: Only the parts mentioned in this list are normal service spare parts.

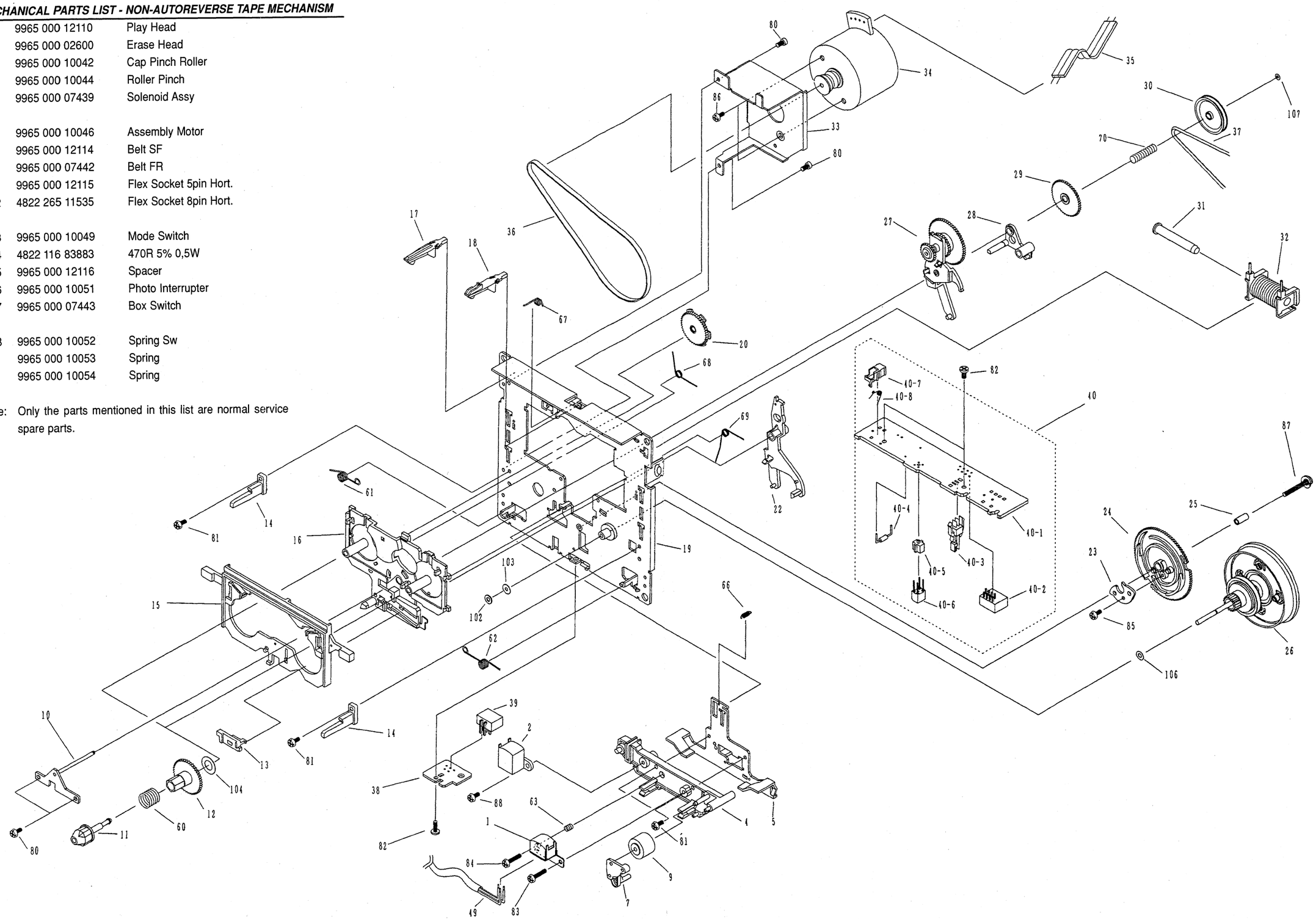

9-7

TAPE MODULE EXPLODED VIEW

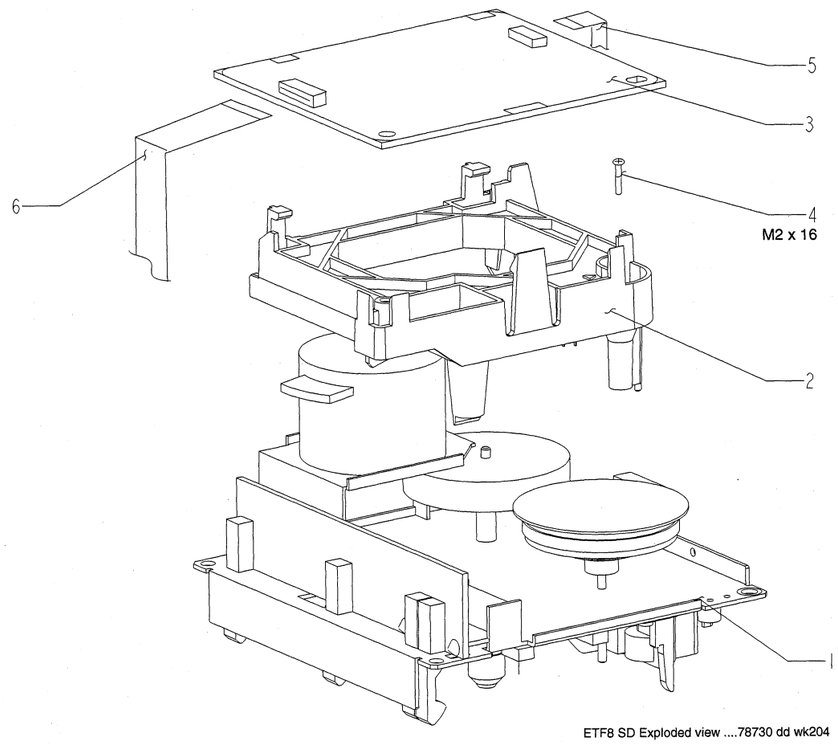

ETF8 SD Exploded view ....78730 dd wk204

MECHANICAL PARTS LIST - TAPE MODULE

1	3139 118 78740	AR Tape Mech. CRL4438
1	3139 118 79220	Non-AR Tape Mech. CFL4217
5	3139 110 35580	Flex Cable 5pin 40mm AD
6	3139 110 35590	Flex Cable 8pin 48mm AD

Note: Only the parts mentioned in this list are normal service spare parts.

ELECTRICAL PARTS LIST - ETF8 BOARD

MISCELLANEOUS

1701	4822 267 10953	Flex Socket 7pin Vert.	
1706	4822 267 10953	Flex Socket 7pin Vert.	
1710	4822 267 10958	Flex Socket 5pin Hort.	
1760	4822 265 11535	Flex Socket 8pin Hort.	

CAPACITORS

2621	5322 126 11578	1nF 10% 50V	
2621	5322 122 31647	1nF 10% 63V	
2622	4822 126 13881	470pF 5% 50V	
2622	5322 122 32268	470pF 5% 50V	
2623	4822 126 13881	470pF 5% 50V	
2623	5322 122 32268	470pF 5% 50V	
2625	4822 126 14305	100nF 10% 16V	
2625	2238 586 59812	100nF +80/-20% 50V	
2701	4822 122 31765	100pF 2% 63V	
2701	5322 122 32531	100pF 5% 50V	
2702	4822 122 31765	100pF 2% 63V	
2702	5322 122 32531	100pF 5% 50V	
2703	4822 122 31765	100pF 2% 63V	
2703	5322 122 32531	100pF 5% 50V	
2704	4822 122 31765	100pF 2% 63V	
2704	5322 122 32531	100pF 5% 50V	
2709	5322 126 11578	1nF 10% 50V	
2710	5322 126 11578	1nF 10% 50V	
2711	4822 122 31765	100pF 2% 63V	
2711	5322 122 32531	100pF 5% 50V	
2712	4822 122 31765	100pF 2% 63V	
2712	5322 122 32531	100pF 5% 50V	
2713	5322 121 42386	100nF 5% 63V	
2714	5322 121 42386	100nF 5% 63V	
2715	4822 124 41584	100uF 20% 10V	
2716	4822 124 41584	100uF 20% 10V	
2717	3198 017 31530	15nF 50V	AR
2717	4822 126 13188	15nF 5% 63V	AR
2718	3198 017 31530	15nF 50V	AR
2718	4822 126 13188	15nF 5% 63V	AR
2721	3198 017 41050	1uF 10V	
2721	4822 126 14043	1uF +80/-20% 16V	
2722	3198 017 41050	1uF 10V	
2722	4822 126 14043	1uF +80/-20% 16V	
2723	4822 126 14238	2,2nF 50V	
2724	4822 126 14238	2,2nF 50V	
2725	4822 126 13883	220pF 5% 50V	
2727	4822 126 14238	2,2nF 50V	
2728	4822 126 14238	2,2nF 50V	
2729	4822 126 14494	22nF 10% 25V	
2729	2238 916 15641	22nF 10% 25V	
2730	4822 126 14494	22nF 10% 25V	
2730	2238 916 15641	22nF 10% 25V	
2731	5322 126 11578	1nF 10% 50V	
2731	5322 122 31647	1nF 10% 63V	
2732	3198 017 41050	1uF 10V	
2732	4822 126 14043	1uF +80/-20% 16V	
2743	4822 126 14494	22nF 10% 25V	
2743	2238 916 15641	22nF 10% 25V	
2747	4822 126 14549	33nF 16V	
2761	4822 124 40196	220uF 20% 16V	
2768	4822 124 40756	1uF 20% 100V	
2769	4822 126 14238	2,2nF 50V	
2770	4822 126 14238	2,2nF 50V	
2780	4822 124 81151	22uF 50V	
2781	5322 126 11583	10nF 10% 50V	
2781	4822 122 33177	10nF 20% 50V	
2782	4822 126 13193	4,7nF 10% 63V	
2784	4822 121 51305	15nF 10% 50V	
2785	4822 124 21913	1uF 20% 63V	
2786	4822 122 31765	100pF 2% 63V	
2786	5322 122 32531	100pF 5% 50V	
2787	4822 126 14549	33nF 16V	
2788	4822 126 14494	22nF 10% 25V	
2788	2238 916 15641	22nF 10% 25V	
2789	4822 126 14549	33nF 16V	
2790	4822 126 14247	1,5nF 50V	AR
2791	4822 126 14247	1,5nF 50V	AR
2793	4822 126 13883	220pF 5% 50V	
2794	4822 126 13883	220pF 5% 50V	
2796	4822 124 40433	47uF 20% 25V	
2797	4822 124 81151	22uF 50V	
2798	4822 124 21732	10uF 20% 25V	
2799	4822 126 14305	100nF 10% 16V	
2799	2238 586 59812	100nF +80/-20% 50V	

RESISTORS

3607	4822 051 30222	2k2 5% 0,062W
3607	4822 117 11449	2k2 5% 0,1W
3608	4822 051 30273	27k 5% 0,062W
3609	4822 051 30222	2k2 5% 0,062W
3609	4822 117 11449	2k2 5% 0,1W
3610	4822 051 20124	120k 5% 0,1W
3611	4822 051 30222	2k2 5% 0,062W
3611	4822 117 11449	2k2 5% 0,1W
3612	4822 051 30563	56k 5% 0,062W
3614	4822 051 30273	27k 5% 0,062W
3624	4822 117 13632	100k 1% 0,062W
3624	4822 117 10837	100k 1% 0,1W
3626	4822 051 30102	1k 5% 0,062W
3628	4822 117 13632	100k 1% 0,062W
3628	4822 117 10837	100k 1% 0,1W
3630	4822 051 30471	470R 5% 0,062W
3678	4822 117 12925	47k 1% 0,063W
3680	4822 117 12925	47k 1% 0,063W
3686	4822 117 13632	100k 1% 0,062W
3686	4822 117 10837	100k 1% 0,1W
3709	4822 051 30339	33R 5% 0,062W

RESISTORS

3710	4822 051 30339	33R 5% 0,062W	
3711	4822 051 30101	100R 5% 0,062W	
3712	4822 051 30101	100R 5% 0,062W	
3717	4822 117 11817	1k2 1% 1/16W	AR
3717	4822 051 20122	1k2 5% 0,1W	AR
3718	4822 117 11817	1k2 1% 1/16W	AR
3718	4822 051 20122	1k2 5% 0,1W	AR
3723	4822 051 30183	18k 5% 0,062W	AR
3723	4822 051 30223	22k 5% 0,062W	Non-AR
3724	4822 051 30183	18k 5% 0,062W	AR
3724	4822 051 30223	22k 5% 0,062W	Non-AR
3733	4822 051 30273	27k 5% 0,062W	
3734	4822 051 30273	27k 5% 0,062W	
3735	4822 051 30223	22k 5% 0,062W	
3735	4822 051 20223	22k 5% 0,1W	
3736	4822 051 30223	22k 5% 0,062W	
3736	4822 051 20223	22k 5% 0,1W	
3737	4822 051 30102	1k 5% 0,062W	
3737	4822 051 10102	1k 2% 0,25W	
3738	4822 051 30102	1k 5% 0,062W	
3738	4822 051 10102	1k 2% 0,25W	
3739	4822 117 12925	47k 1% 0,063W	
3740	4822 117 12925	47k 1% 0,063W	
3743	4822 051 30563	56k 5% 0,062W	
3744	4822 051 30563	56k 5% 0,062W	
3745	4822 117 11817	1k2 1% 1/16W	
3745	4822 051 20122	1k2 5% 0,1W	
3746	4822 117 11817	1k2 1% 1/16W	
3746	4822 051 20122	1k2 5% 0,1W	
3749	4822 051 30121	120R 5% 0,062W	
3749	4822 051 20121	120R 5% 0,1W	
3750	4822 051 30121	120R 5% 0,062W	
3750	4822 051 20121	120R 5% 0,1W	
3762	4822 117 12968	820R 5% 0,62W	
3764	4822 051 30181	180R 5% 0,062W	
3764	4822 117 11448	180R 1% 0,1W	
3768	4822 051 30103	10k 5% 0,062W	
3768	4822 117 10833	10k 1% 0,1W	
3769	4822 051 30223	22k 5% 0,062W	AR
3769	4822 051 30183	18k 5% 0,062W	Non-AR
3770	4822 051 30152	1k5 5% 0,062W	
3771	4822 117 11817	1k2 1% 1/16W	
3771	4822 051 20122	1k2 5% 0,1W	
3772	4822 051 30153	15k 5% 0,062W	AR
3772	4822 051 30123	12k 5% 0,062W	Non-AR
3774	4822 051 30183	18k 5% 0,062W	
3775	4822 117 13608	4,7R 5% 0,063W	
3776	4822 051 30682	6k8 5% 0,062W	
3777	4822 051 30151	150R 5% 0,062W	
3777	4822 117 10353	150R 1% 0,1W	
3778	4822 052 10688	6R8 5% 0,33W	
3779	4822 051 30334	330k 5% 0,062W	
3780	4822 051 30105	1M 5% 0,062W	
3780	4822 051 20105	1M 5% 0,1W	
3781	4822 051 30475	4M7 5% 0,062W	
3786	4822 051 30223	22k 5% 0,062W	
3786	4822 051 20223	22k 5% 0,1W	
3789	4822 117 12925	47k 1% 0,063W	
3790	4822 051 30223	22k 5% 0,062W	
3790	4822 051 20223	22k 5% 0,1W	
3791	4822 051 30273	27k 5% 0,062W	
3796	4822 051 30475	4M7 5% 0,062W	
3797	4822 051 30563	56k 5% 0,062W	
3800	4822 051 30223	22k 5% 0,062W	
3800	4822 051 20223	22k 5% 0,1W	
4701	4822 051 30008	0R Jumper 0603	
4702	4822 051 30008	0R Jumper 0603	
4705	4822 051 30008	0R Jumper 0603	
4707	4822 051 30008	0R Jumper 0603	
4708	4822 051 30008	0R Jumper 0603	
4709	4822 051 30008	0R Jumper 0603	
4710	4822 051 30008	0R Jumper 0603	
4711	4822 051 30008	0R Jumper 0603	
4712	4822 051 30008	0R Jumper 0603	
4718	4822 051 30008	0R Jumper 0603	
4719	4822 051 30008	0R Jumper 0603	
4720	4822 051 30008	0R Jumper 0603	
4721	4822 051 30008	0R Jumper 0603	
4723	4822 051 30008	0R Jumper 0603	
4725	4822 051 30008	0R Jumper 0603	
4726	4822 051 30008	0R Jumper 0603	
4727	4822 051 30008	0R Jumper 0603	
4729	4822 051 30008	0R Jumper 0603	
4730	4822 051 30008	0R Jumper 0603	
4731	4822 051 30008	0R Jumper 0603	
4732	4822 051 30008	0R Jumper 0603	
4733	4822 051 30008	0R Jumper 0603	
4734	4822 051 30008	0R Jumper 0603	
4735	4822 051 30008	0R Jumper 0603	
4736	4822 051 30008	0R Jumper 0603	Non-AR
4737	4822 051 30008	0R Jumper 0603	Non-AR
4738	4822 051 30008	0R Jumper 0603	
4739	4822 051 30008	0R Jumper 0603	
4741	4822 051 30008	0R Jumper 0603	
4746	4822 051 30008	0R Jumper 0603	
4747	4822 051 30008	0R Jumper 0603	

COILS & FILTERS

5701	4822 157 62552	Coil 2,2uH 5%
5703	4822 156 20946	Osc Coil 100kHz

DIODES

6612	4822 130 31878	1N4003G
6770	4822 130 30621	1N4148

9-9

ELECTRICAL PARTS LIST - ETF8 BOARD

6771	4822 130 30621	1N4148
6772	4822 130 30621	1N4148
6773	4822 130 30621	1N4148
6774	4822 130 30621	1N4148
6776	4822 130 30621	1N4148
6777	4822 130 34382	BZX79-B8V2
6778	4822 130 30621	1N4148

TRANSISTORS & INTEGRATED CIRCUIT

7610	5322 209 11306	HEF4094BT
7612	4822 130 11201	PMBT2907
7614	4822 130 11201	PMBT2907
7618	5322 130 60159	BC847B
7620	5322 130 60159	BC847B
7624	5322 130 60159	BC847B
7720	9322 167 09668	AN17150ATA
7780	5322 130 60159	BC847B
7781	4822 130 42804	BC817-25
7782	4822 130 44568	BC557B
7783	5322 130 60159	BC847B
7784	4822 130 60373	BC857B
7786	9340 052 70126	FET SIG J112
7788	5322 130 60159	BC847B
7789	5322 130 60159	BC847B
7790	5322 130 60159	BC847B

Note: Only the parts mentioned in this list are normal service spare parts.

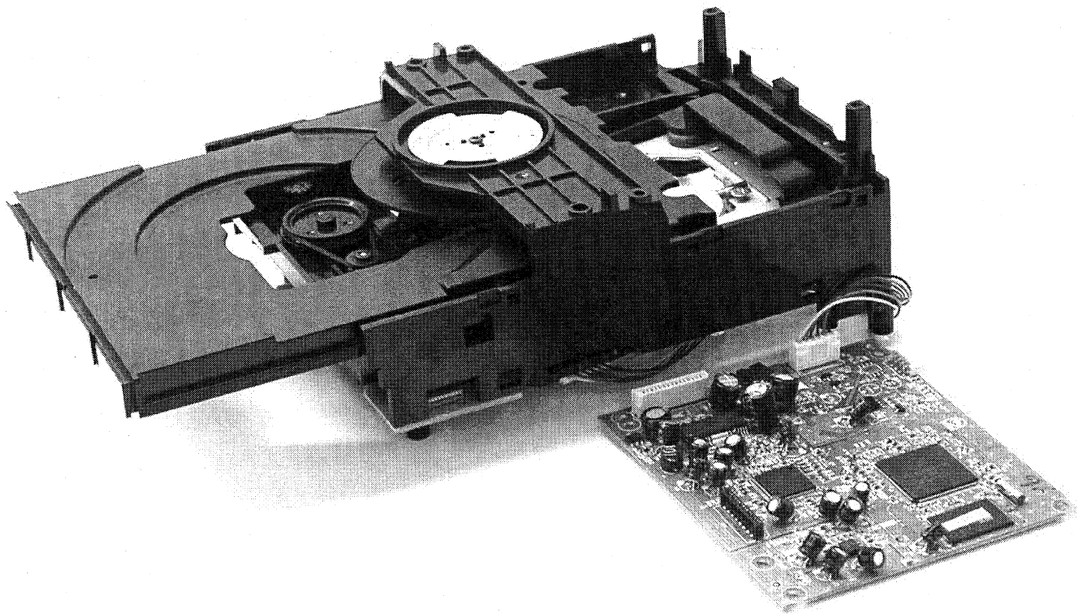

Universal Loader

(Single Disc Tray Loader)

WMA MP3 version

This document describes the version with the Sanyo CD drive ***DA11VF.***
The CD drive used in a specific application is stated on the type plate, located on one of the side walls of the changer module.

TABLE OF CONTENTS

Service Hints 10-1
Pin description 10-3
IC Block Diagram 10-4
Block Diagram 10-5
Tray-motor Board 10-6
Circuit Diagram CD Main Board .....10-7 to 10-12
Layout CD Main Board .....10-13 to 10-14
Exploded View.....10-15
Partslist 10-16

Service hints

In case of symptom „skipping tracks" perform following actions:

1. VERIFY THE COMPLAINT

PLAYABILITY CHECK

use CD-RW Printed Audio Disk 7104 099 96611
TR 3 (Fingerprint)
TR 8 (600µ black dot) **maximum at 01:00**

- playback of these two tracks without audible disturbance playing time for: Fingerprint ≥10seconds
  Black dot from 00:50 to 01:10
- jump forward/backward (search) within a reasonable time

2. CLEAN THE LENS

CD DRIVE – LENS CLEANING

Before touching the lens it is advised to clean the surface of the lens by blowing clean air over it in order to avoid that little particles make scratches on the lens.

Because the material of the lens is synthetic and coated with a special anti-reflectivity layer, cleaning must be done with a non-aggressive cleaning fluid. It is advised to use "Cleaning Solvent B4", available with codenumber 4822 389 10026.

The actuator is a very precise mechanical component and may not be damaged in order to guarantee its full function. It is advised to clean the lens gently (don't press too hard) with a soft and clean cotton bud moistened with the special lens cleaner.

The direction of cleaning must be in the way as indicated in the picture below.

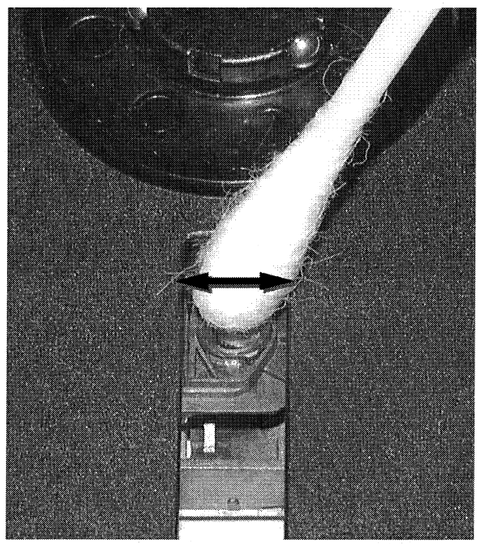

3. MEASURE THE LASER CURRENT

CD DRIVE – LASER CURRENT MEASUREMENT

The laser current can be measured as a voltage drop on resistor 3822. Typical value 55mV (DA11 disc drive).

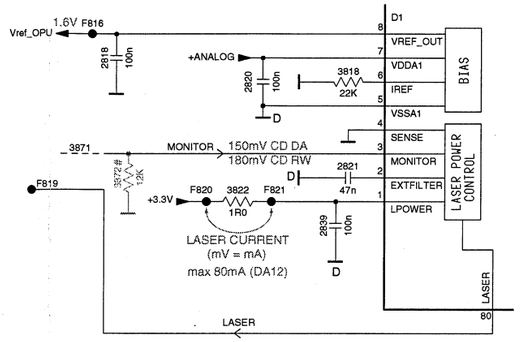

If the value is higher than 80mV (DA11 disc drive) or the current increases just after switching the laser on - the laserdiode is most probably defective. In that case the CD drive has to be replaced.

4. GENERAL HINTS

Since the HF pre-amplifier is integrated into the new "CD18" signal processor the well-known eye pattern signal is not available as external signal and cannot be measured anymore. Also measuring the offset voltages is not necessary because the new signal processor contains an automatic offset compensation.

However the circuitry offers some new aspects for checking the system:

- the Monitor voltage shows if the sensitivity is set correctly (attention: ESD sensitive line!):
  CD DA: 150mV
  CD RW: 180mV

- the Focus search algorithm is divided into 4 steps:
  1st step: CD DA sensitivity
  2nd step: CD DA enforced sensitivity
  3rd step: CD RW sensitivity
  4th step: CD RW enforced sensitivity

The used sensitivity can be found out by either measuring the Monitor voltage or counting the up/down movements of the OPU until focus is found.
e.g. when a normal CD DA is played back Monitor voltage should measure 150mV respectively Focus should be found within the first up/down movement of the OPU.

In case a higher sensitivity setting can be observed than defined, there are following possible reasons:
- disc scratched or dirty
- poor reflectivity of the disc - disc not conform standard
- lens of the OPU dirty
- laser power too low

Service hints

CAUTION

CHARGED CAPACITORS ON THE SERVO BOARD MAY DAMAGE THE CD DRIVE ELECTRONICS WHEN CONNECTING A NEW CD MECHANISM. THAT´S WHY, BESIDES THE SAFETY MEASURES LIKE
- ***SWITCH OFF POWER SUPPLY***
- ***ESD PROTECTION***

ADDITIONAL ACTIONS MUST BE TAKEN BY THE REPAIR TECHNICIAN.

The following steps have to be done when replacing the CD mechanism:
1. Disconnect flexfoil cable from the old CD drive
2. Put a paperclip onto the flexfoil cable to short-circuit the contacts (fig.1)
3. Remove the old CD drive
4. Remove paperclip from the flexfoil cable and connect it to the new CD drive
5. Position the new CD drive on its studs
6. Remove solder joint from the Laser unit (see below)

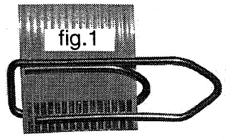

Attention: The laser diode of this CD drive is protected against ESD by a solder joint which short-circuits the laser diode to ground.
For proper functionality of the CD drive this solder joint must be removed **after** connecting the drive to the set.

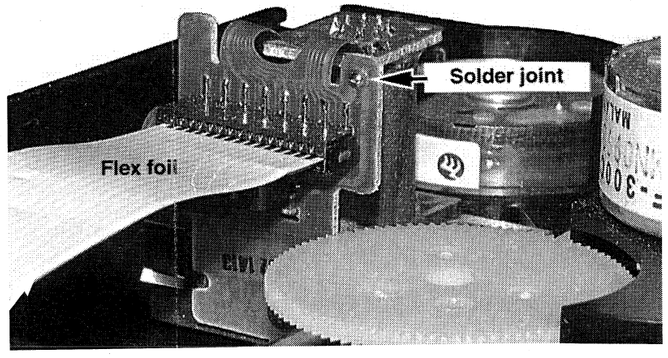

Emergency open

In case of a Supply fault, the drawer can be opened manually.
1. Remove the top cover of the set to get access to the CD Module.
2. Proceed as shown in picture below.

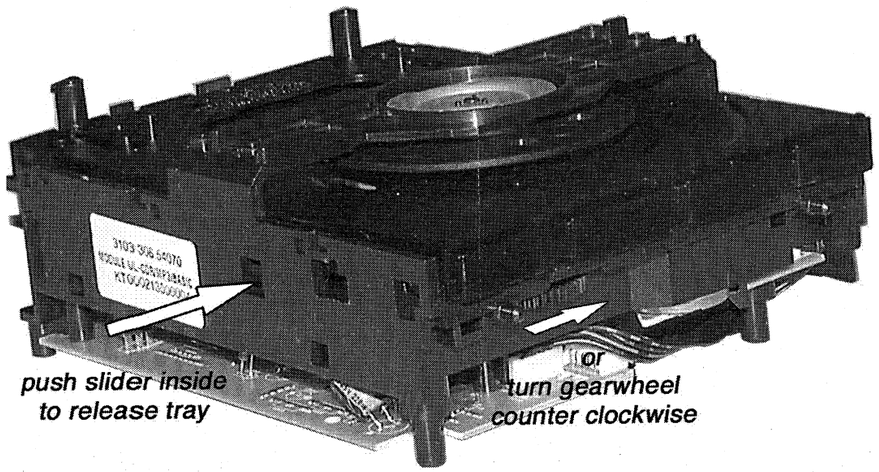

Service hints

Dismantling of Drawer

1. Open the drawer and release 2 catches as shown in fig. 2
2. Pull drawer out.

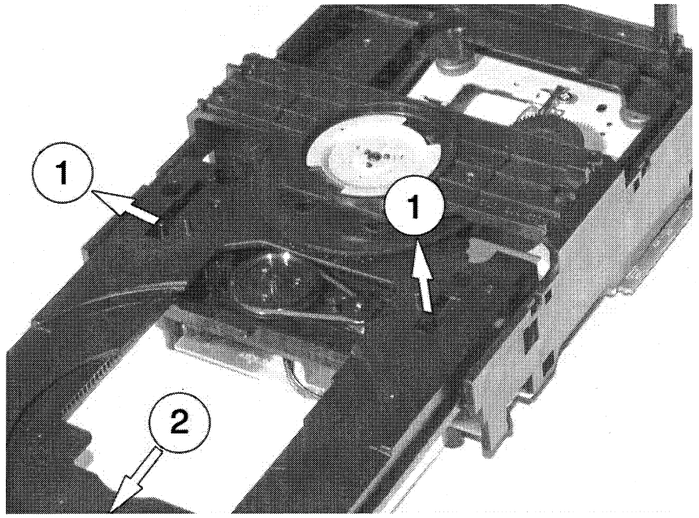

fig.2

Assembling of Drawer

1. Check if slider is on the right side → see picture below.
2. If necessary - move slider to the right end position first.
3. Insert the Drawer.

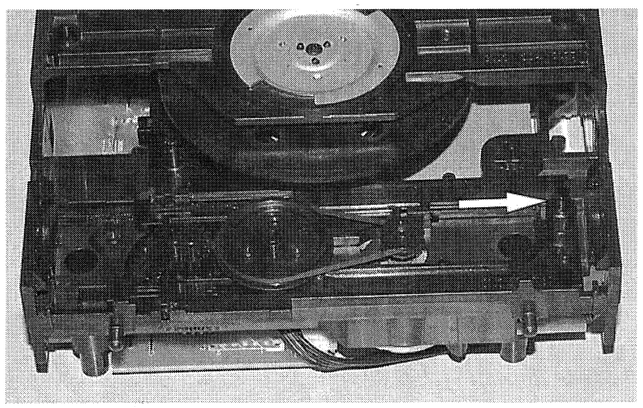

Service hints

CAUTION

CHARGED CAPACITORS ON THE SERVO BOARD MAY DAMAGE THE CD DRIVE ELECTRONICS WHEN CONNECTING A NEW CD MECHANISM. THAT´S WHY, BESIDES THE SAFETY MEASURES LIKE
- ***SWITCH OFF POWER SUPPLY***
- ***ESD PROTECTION***

ADDITIONAL ACTIONS MUST BE TAKEN BY THE REPAIR TECHNICIAN.

The following steps have to be done when replacing the CD mechanism:
1. Disconnect flexfoil cable from the old CD drive
2. Put a paperclip onto the flexfoil cable to short-circuit the contacts (fig.1)
3. Remove the old CD drive
4. Remove paperclip from the flexfoil cable and connect it to the new CD drive
5. Position the new CD drive on its studs
6. Remove solder joint from the Laser unit (see below)

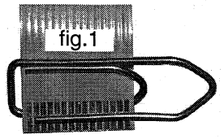

Attention: The laser diode of this CD drive is protected against ESD by a solder joint which short-circuits the laser diode to ground.
For proper functionality of the CD drive this solder joint must be removed **after** connecting the drive to the set.

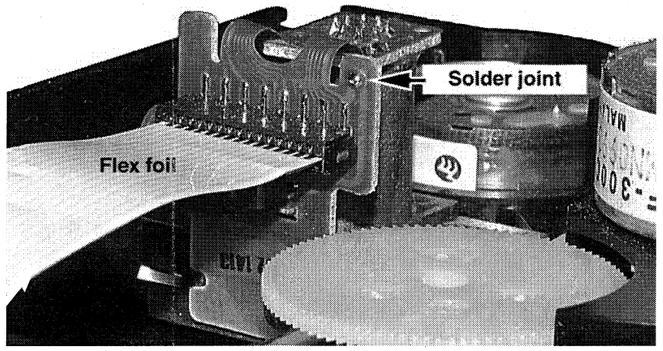

Emergency open

In case of a Supply fault, the drawer can be opened manually.
1. Remove the top cover of the set to get access to the CD Module.
2. Proceed as shown in picture below.

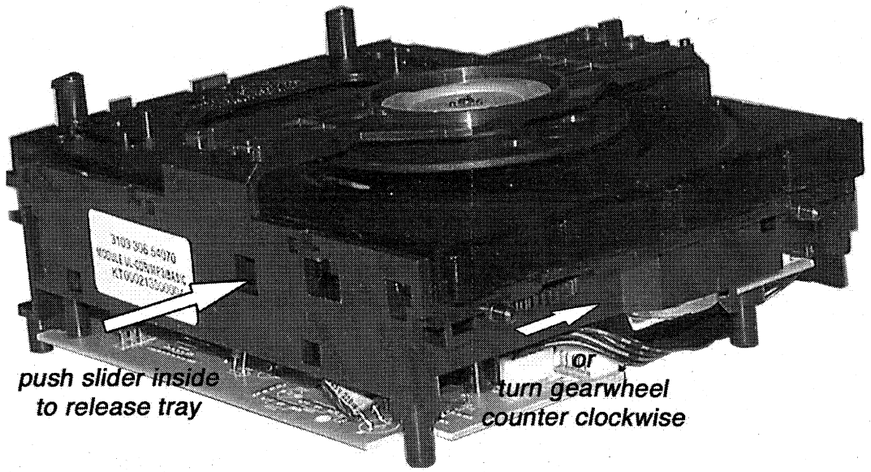

Service hints

Dismantling of Drawer

1. Open the drawer and release 2 catches as shown in fig. 2
2. Pull drawer out.

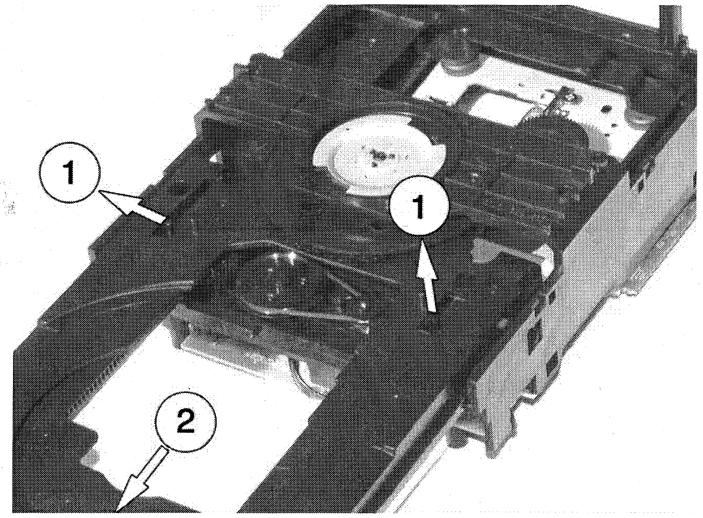

fig.2

Assembling of Drawer

1. Check if slider is on the right side → see picture below.
2. If necessary - move slider to the right end position first.
3. Insert the Drawer.

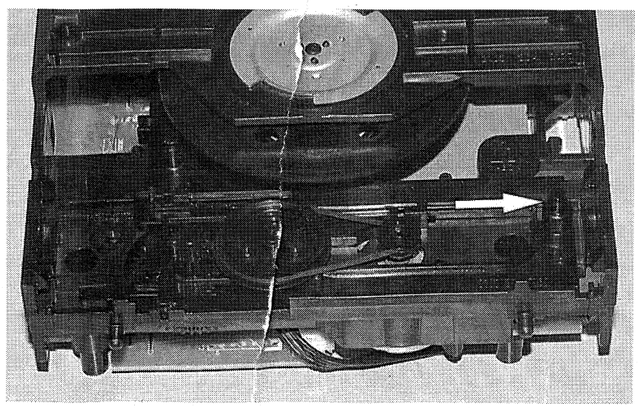

10-3

PIN DESCRIPTION
CD AUDIO DECODER - SAA7824

SYMBOL	PIN	DESCRIPTION
LPOWER	1	Laser power supply
EXTFILTER	2	10 nF capacitor for Laser start-up control
MONITOR	3	Laser monitor diode
SENSE	4	OPU ground reference point for MONITOR measurement
V_{SSA1}	5	Analogue ground 1
IREF	6	Reference current pin (24KΩ resister to analogue ground)
V_{DDA1}	7	Analogue supply voltage 1
VREF_OUT	8	Servo reference voltage
D1	9	Diode voltage/current input (central diode signal input)
D2	10	Diode voltage/current input (central diode signal input)
D3	11	Diode voltage/current input (central diode signal input)
D4	12	Diode voltage/current input (central diode signal input)
R1	13	Diode voltage/current input (satellite diode signal input)
R2	14	Diode voltage/current input (satellite diode signal input)
CSLICE	15	10nF capacitor for adaptive HF dataslicer
V_{DDA2}	16	Analogue supply voltage 2
V_{SSA2}	17	Analogue ground 2
OSCOUT	18	Crystal/resonator output
OSCIN	19	Crystal/resonator input
V_{SSA3}	20	Analogue ground 3
DAC_GND	21	Audio DAC ground
DAC_RP	22	Audio DAC right channel differential output (positive)
DAC_RN	23	Audio DAC right channel differential output (negative)
DAC_VREF	24	Audio DAC decoupling point (10uF//100nF to ground)
DAC_LN	25	Audio DAC left channel differential output (negative)
DAC_LP	26	Audio DAC left channel differential output (positive)
DAC_VPOS	27	Audio DAC positive supply
BUF_VPOS	28	Audio buffer positive supply
BUF_IN_R	29	Audio buffer right input
BUF_OUT_R	30	Audio buffer right output
BUF_OUT_L	31	Audio buffer left output
BUF_IN_L	32	Audio buffer left input
BUF_GND	33	Audio buffer ground
LKILL	34	Kill output for left channel (configurable as open drain)
RKILL	35	Kill output for right channel (configurable as open drain)
CDT_RDY	36	CD-Text to micro ready flag
CDT_DATA	37	CD-Text data to micro
CDT_CLK	38	CD-Text micro clock
CFLAG	39	Correction flag output (open drain)
V_{SSD1}	40	Digital ground 1
V_{DDD1}	41	Digital supply voltage 1
SDI	42	Serial data input (loopback)
WCLI	43	Word clock input (loopback)

SYMBOL	PIN	DESCRIPTION
SCLI	44	Serial bit clock (loopback)
EF	45	C2 error flag
DATA	46	Serial data output
WCLK	47	Word clock output
SCLK	48	Serial clock output
CLK16	49	16MHz clock
CLK4_12	50	Configurable 4MHz or 12MHz clock
$\overline{RESET}$	51	Power on reset (active low)
SDA	52	Micro interface data I/O line (open drain output)
SCL	53	Micro interface clock line
RAB	54	Micro interface R/W & load control line (4-wire)
SILD	55	Micro interface R/W & load control line (4-wire)
STATUS	56	Servo interrupt request line/decoder status register/DC offset value readback
RCK	57	Subcode clock
SUB	58	P to W subcode
SFSY	59	Subcode frame sync
SBSY	60	Subcode block sync
V_{SSD2}	61	Digital ground 2
DOBM	62	Bi-phase mark output (externally buffered)
V_{DDD2}	63	Digital supply voltage 2
RA	64	Radial actuator
FO	65	Focus actuator
SL	66	Sledge actuator
MOTO1	67	Motor output 1
MOTO2	68	Motor output 2
V_{SSD3}	69	Digital ground 3
V_{DDD3}	70	Digital supply voltage 3
V1	71	Versatile pin 1
V2	72	Versatile pin 2
V3	73	Versatile pin 3
V4	74	Versatile pin 4
V5	75	Versatile pin 5
TEST1	76	Test pin
TEST2	77	Test pin
TEST3	78	Test pin
TEST4	79	Test pin
LASER	80	Laser drive

10-4

INTERNAL BLOCK DIAGRAM
CD AUDIO DECODER - IC SAA7824

SAA7824

CD audio decoder, digital servo & filterless DAC
with integrated pre-amp & laser control

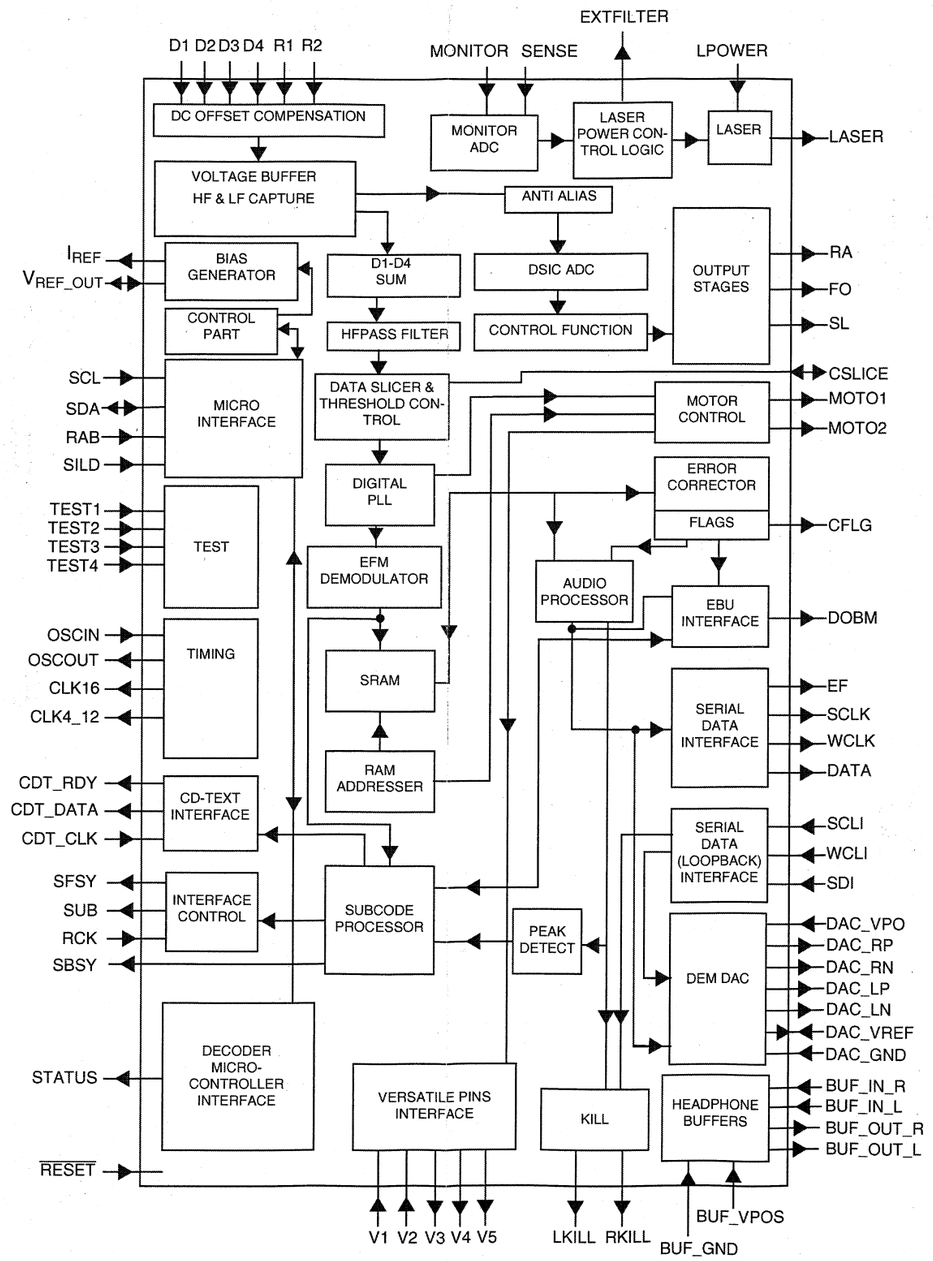

10-5

BLOCK DIAGRAM
Universal Loader

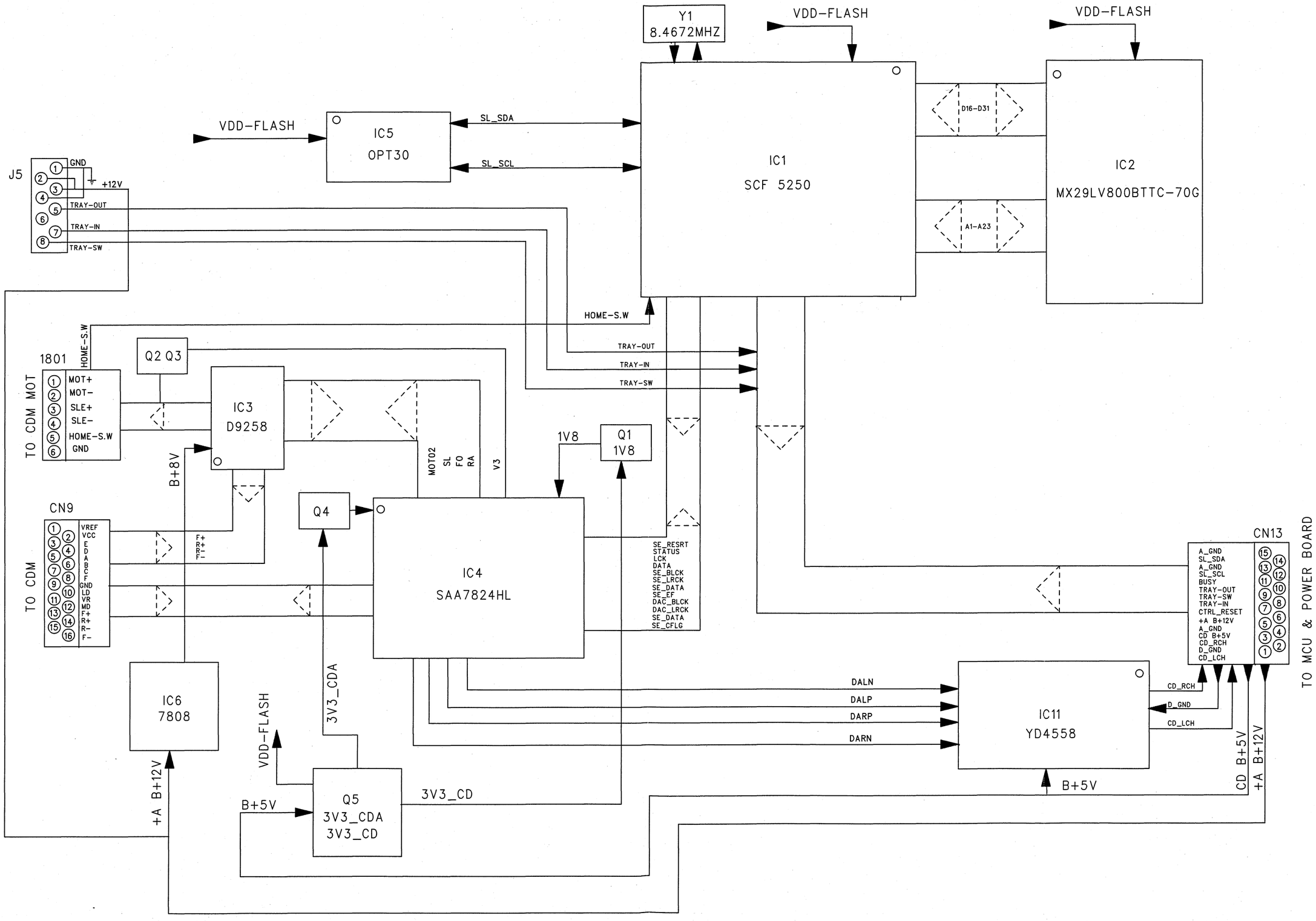

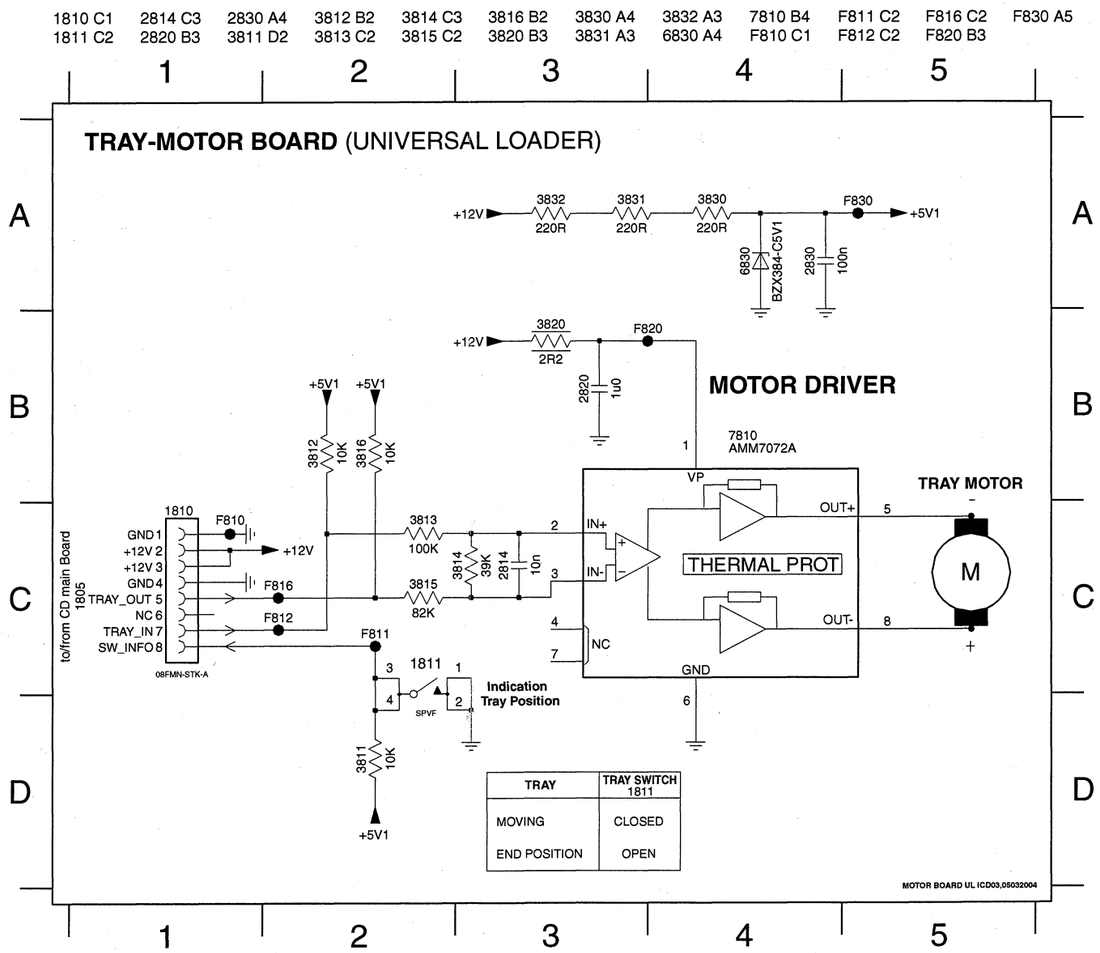

TRAY MOTOR BOARD / copper side view

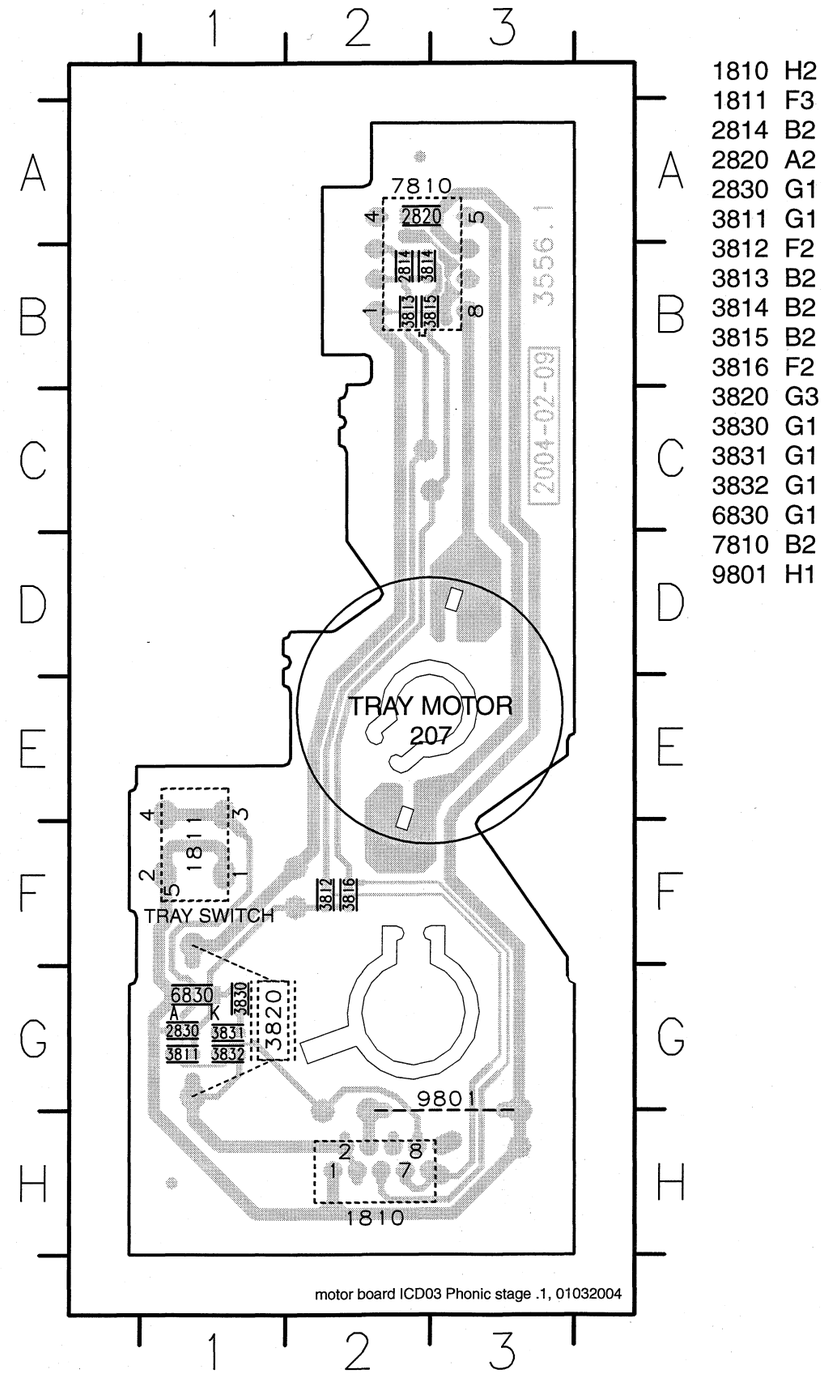

1810 H2
1811 F3
2814 B2
2820 A2
2830 G1
3811 G1
3812 F2
3813 B2
3814 B2
3815 B2
3816 F2
3820 G3
3830 G1
3831 G1
3832 G1
6830 G1
7810 B2
9801 H1

10-7

CIRCUIT DIAGRAM
CD SECTION

FOR ORIENTATION ONLY

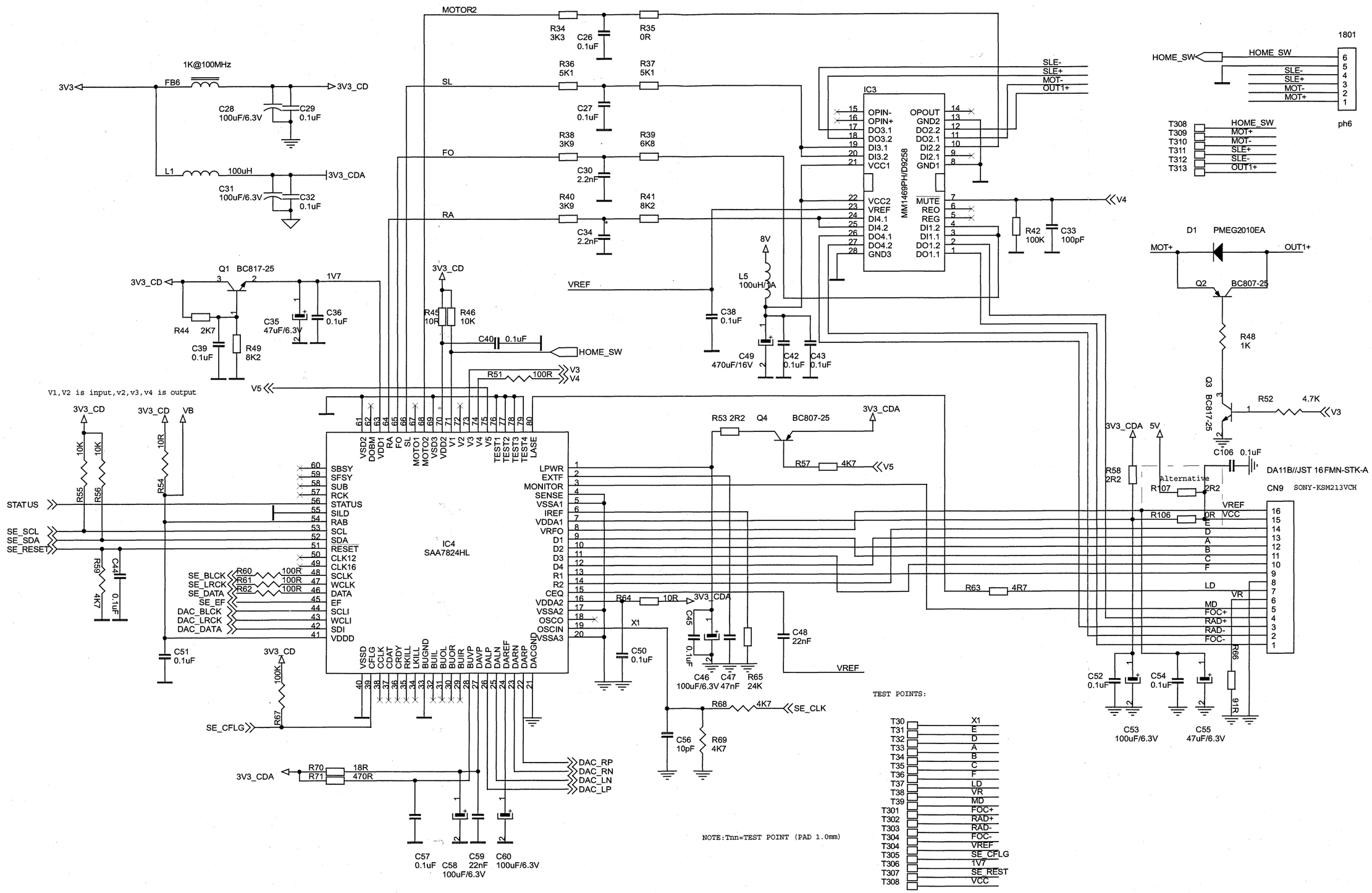

10-8

CIRCUIT DIAGRAM
AUDIO SECTION

FOR ORIENTATION ONLY

Notes:
The C79 ,C91 must be placed as near to the CD18 as possible

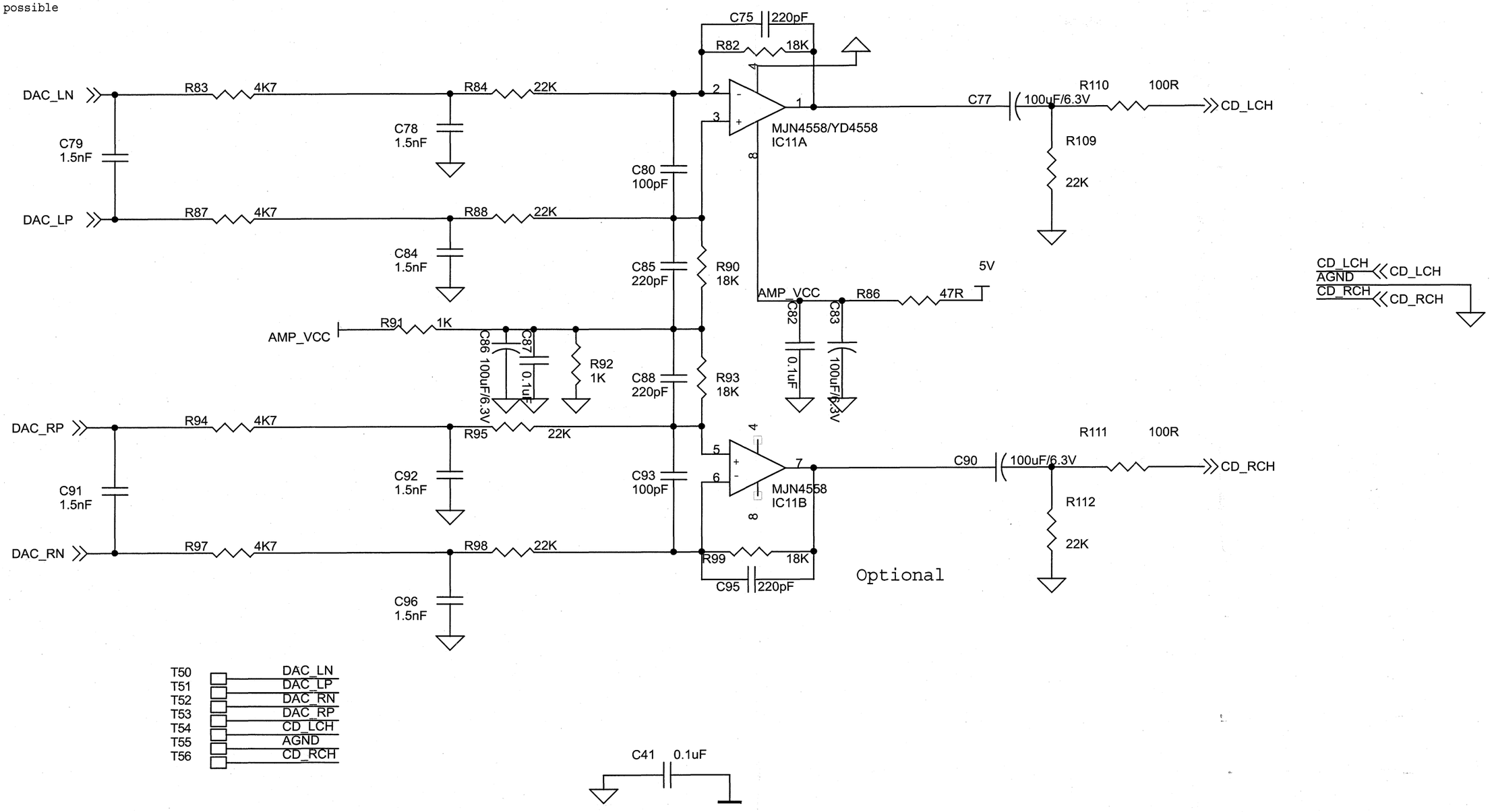

10-9

CIRCUIT DIAGRAM
FLASH MEMORY SECTION

FOR ORIENTATION ONLY

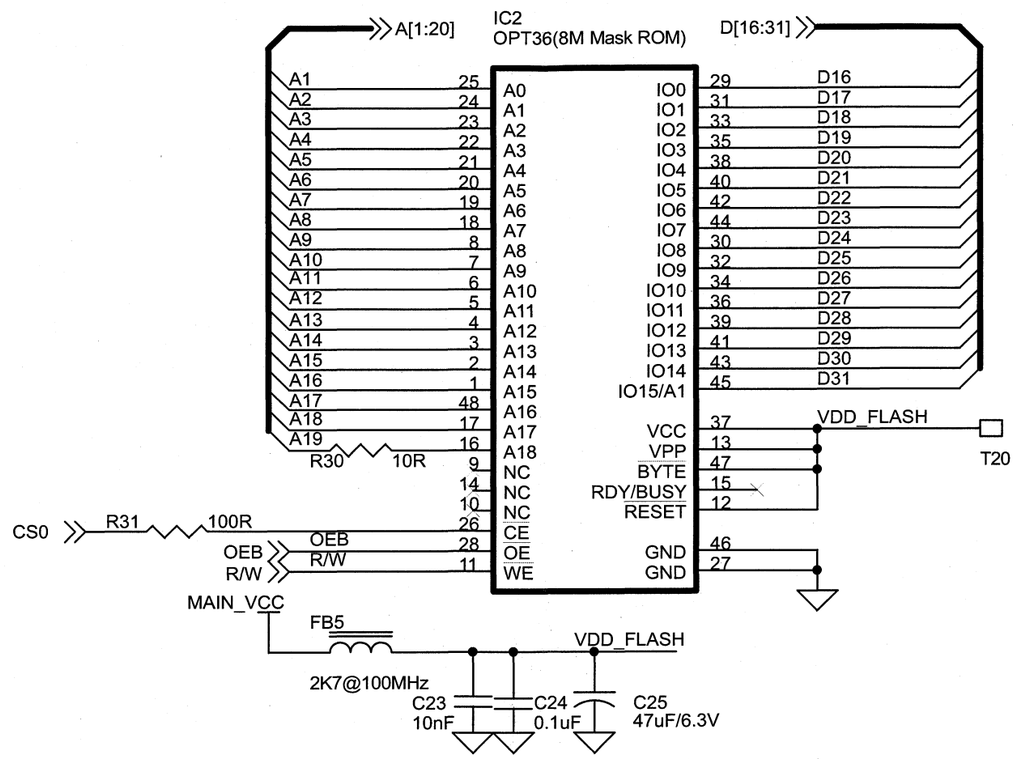

NOTE:Tnn=TEST POINT (PAD 1.0mm)

10-10

FOR ORIENTATION ONLY

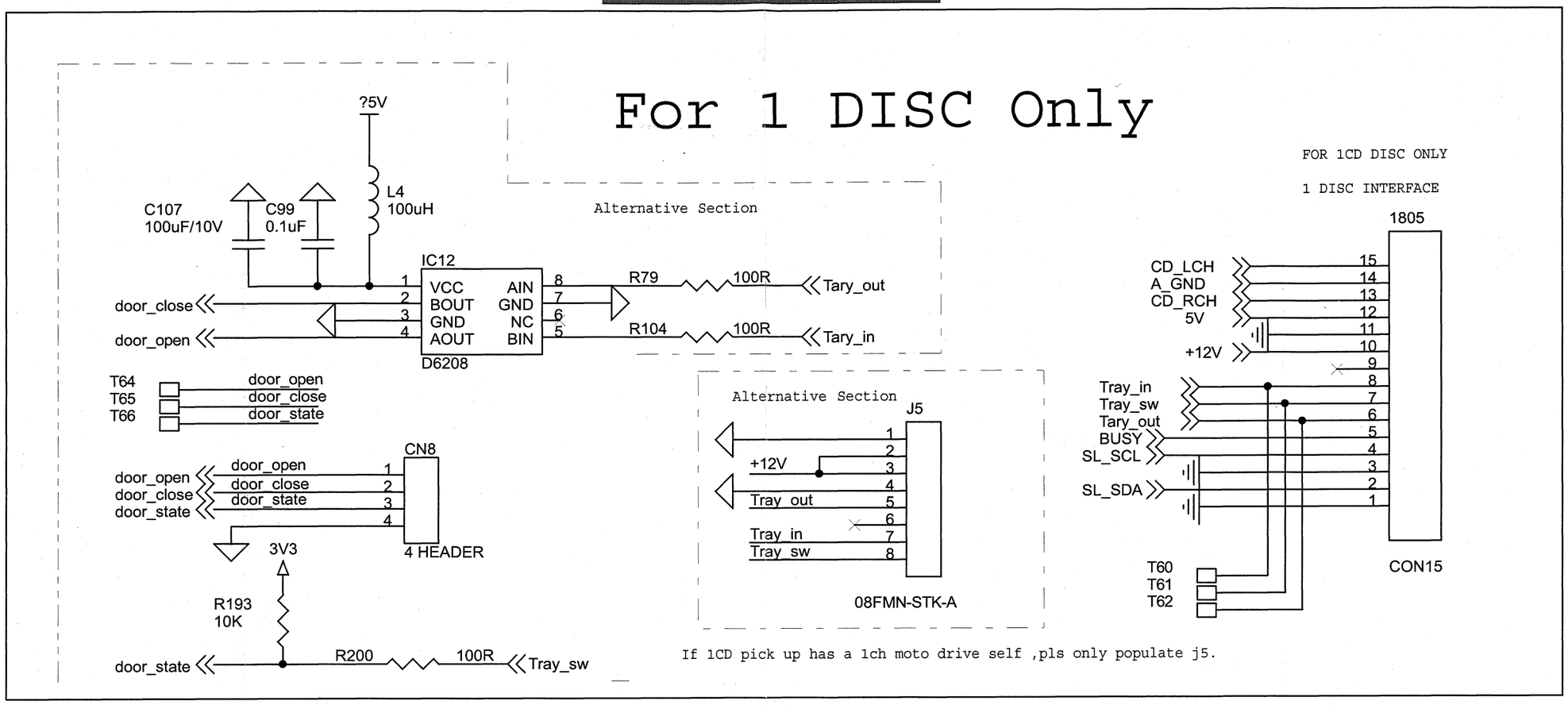

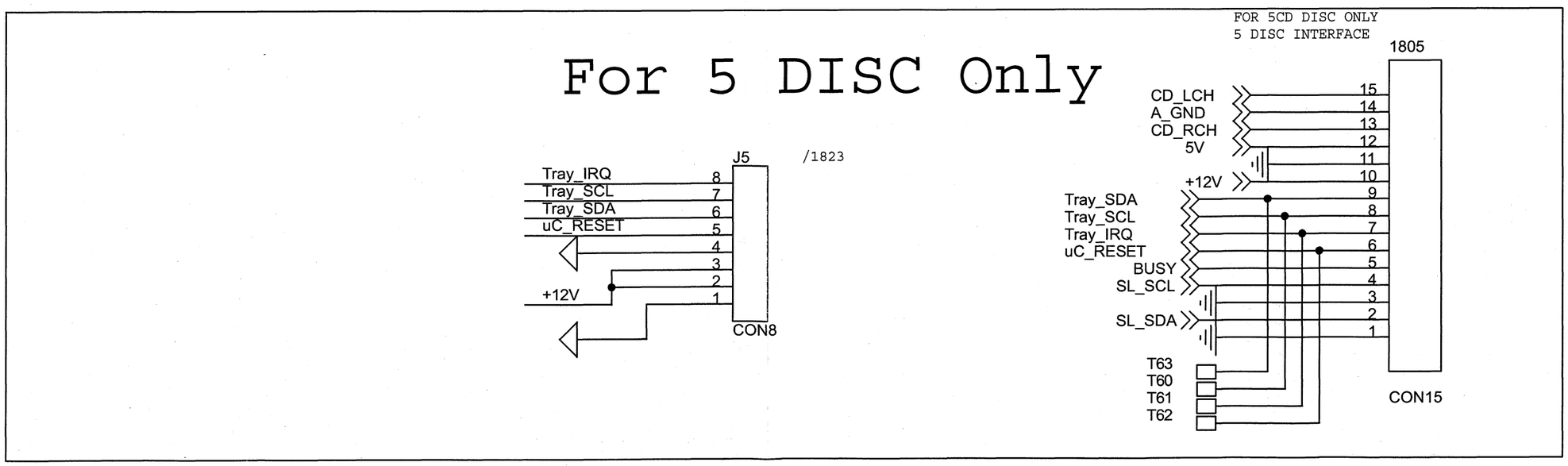

10-11

FOR ORIENTATION ONLY

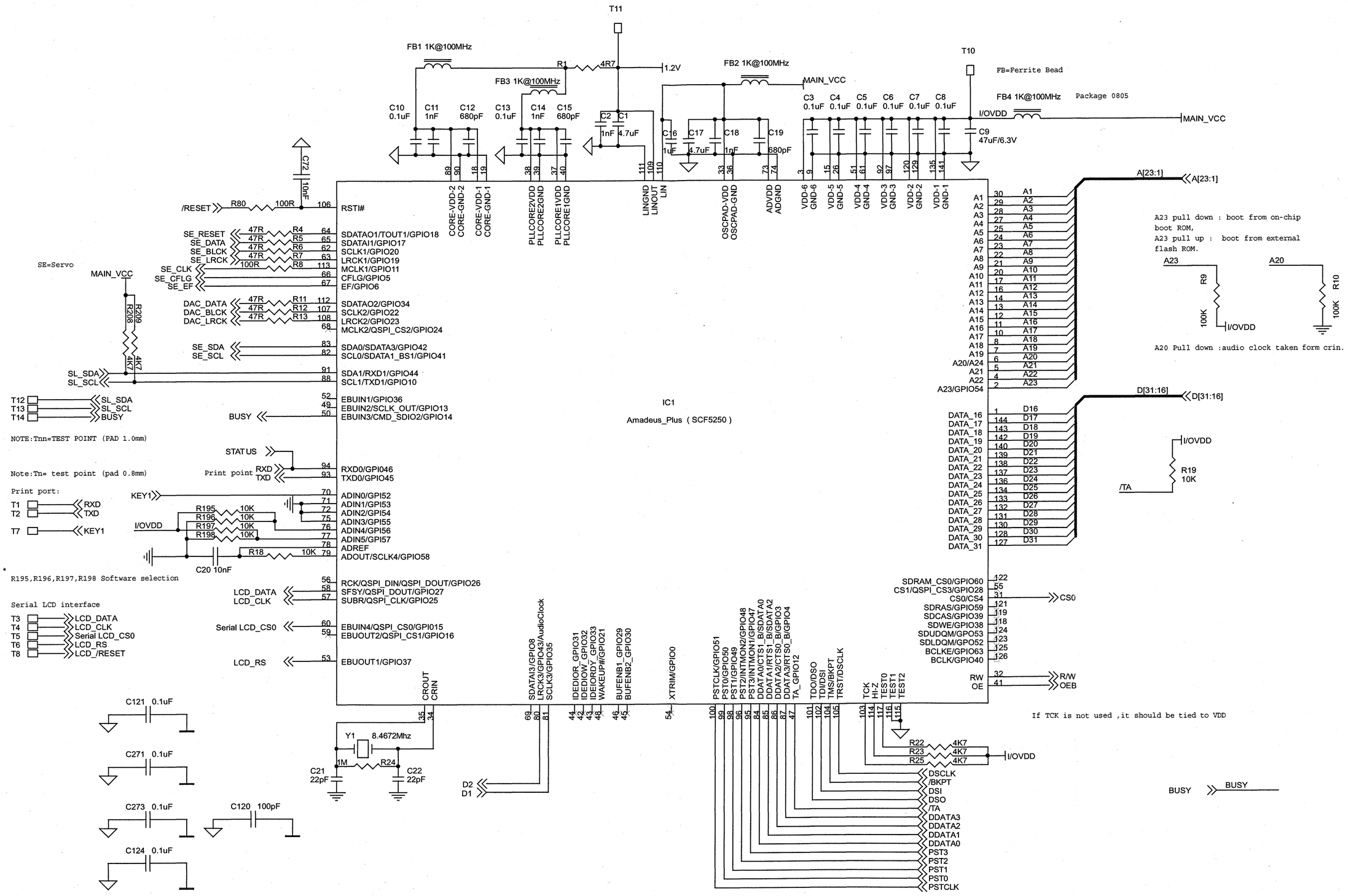

10-12

FOR ORIENTATION ONLY

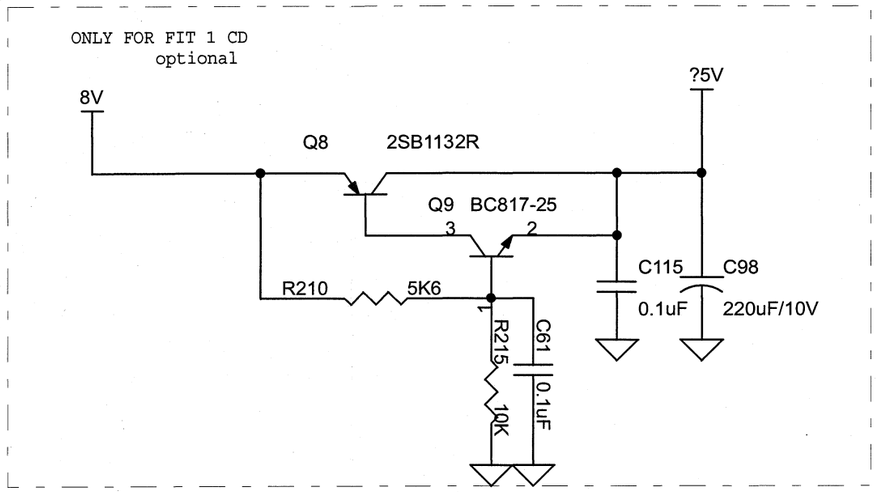

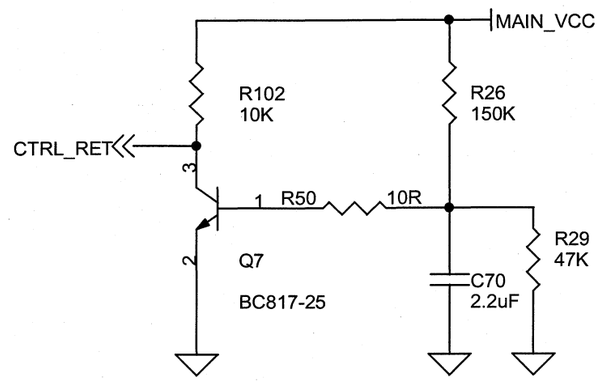

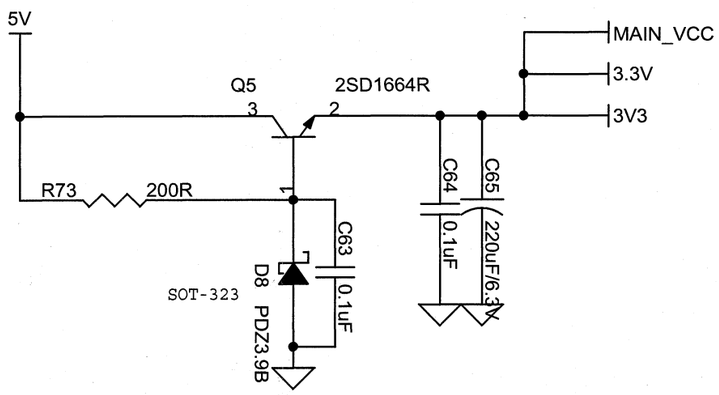

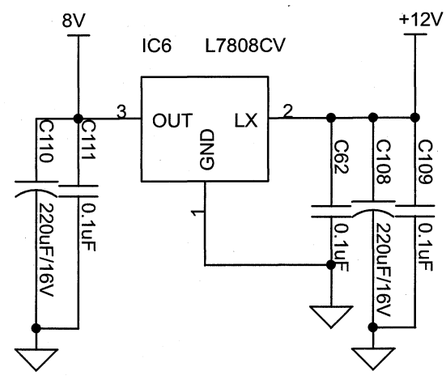

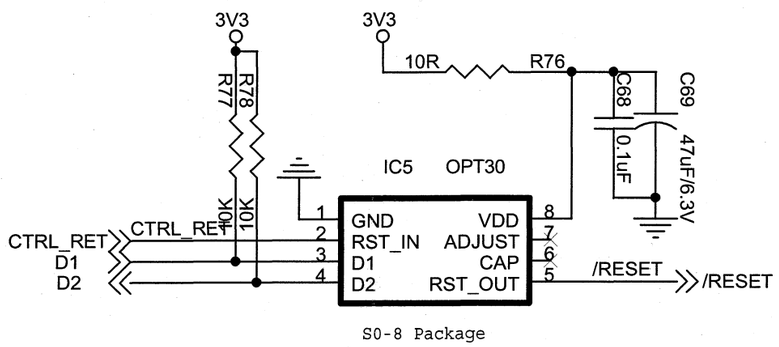

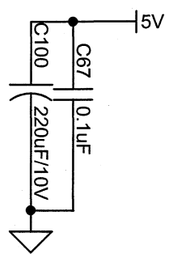

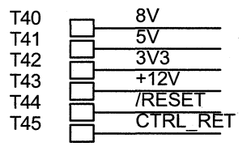

10-13

LAYOUT DIAGRAM
TOP VIEW

FOR ORIENTATION ONLY

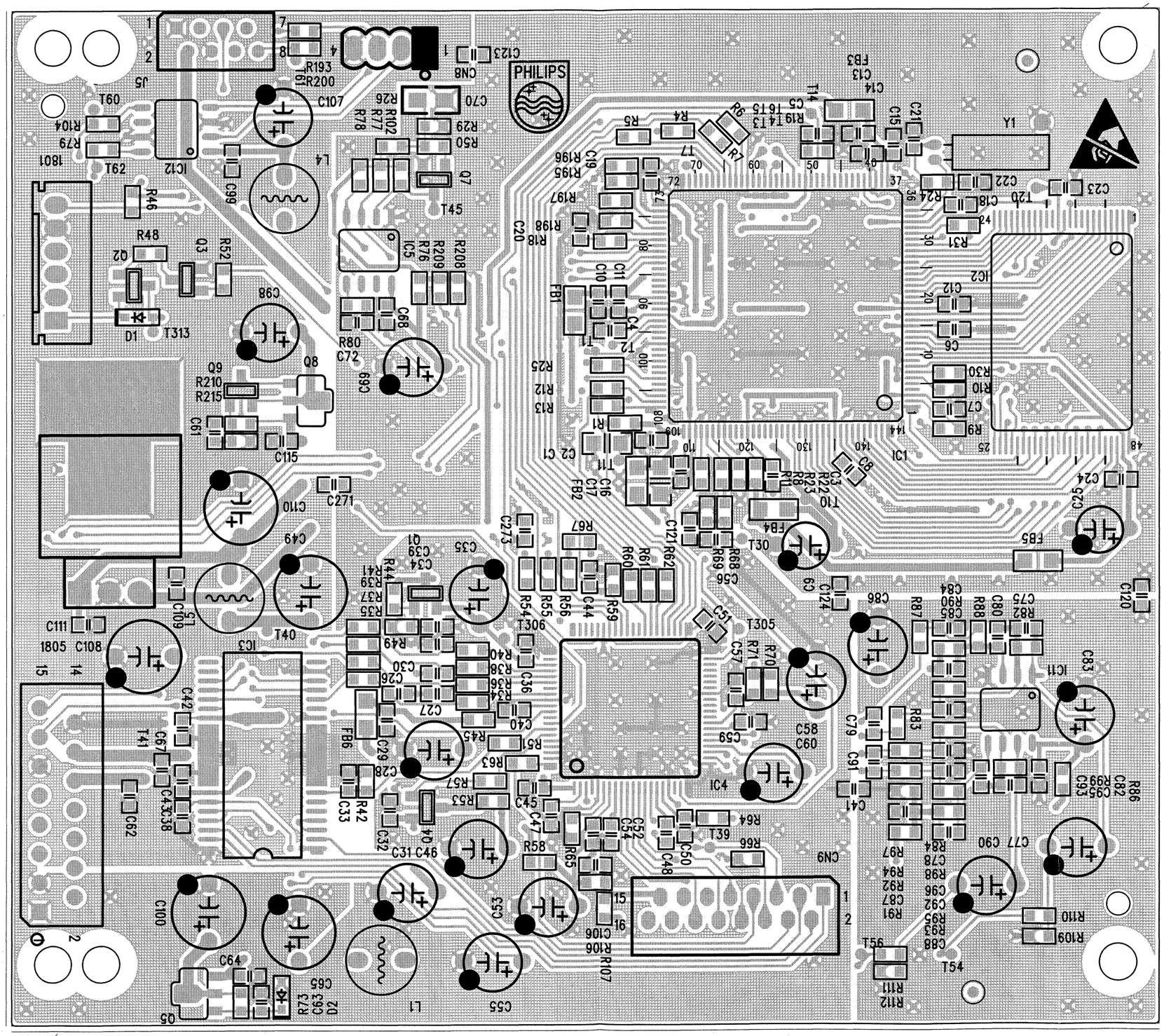

10-14

LAYOUT DIAGRAM
BOTTOM VIEW

FOR ORIENTATION ONLY

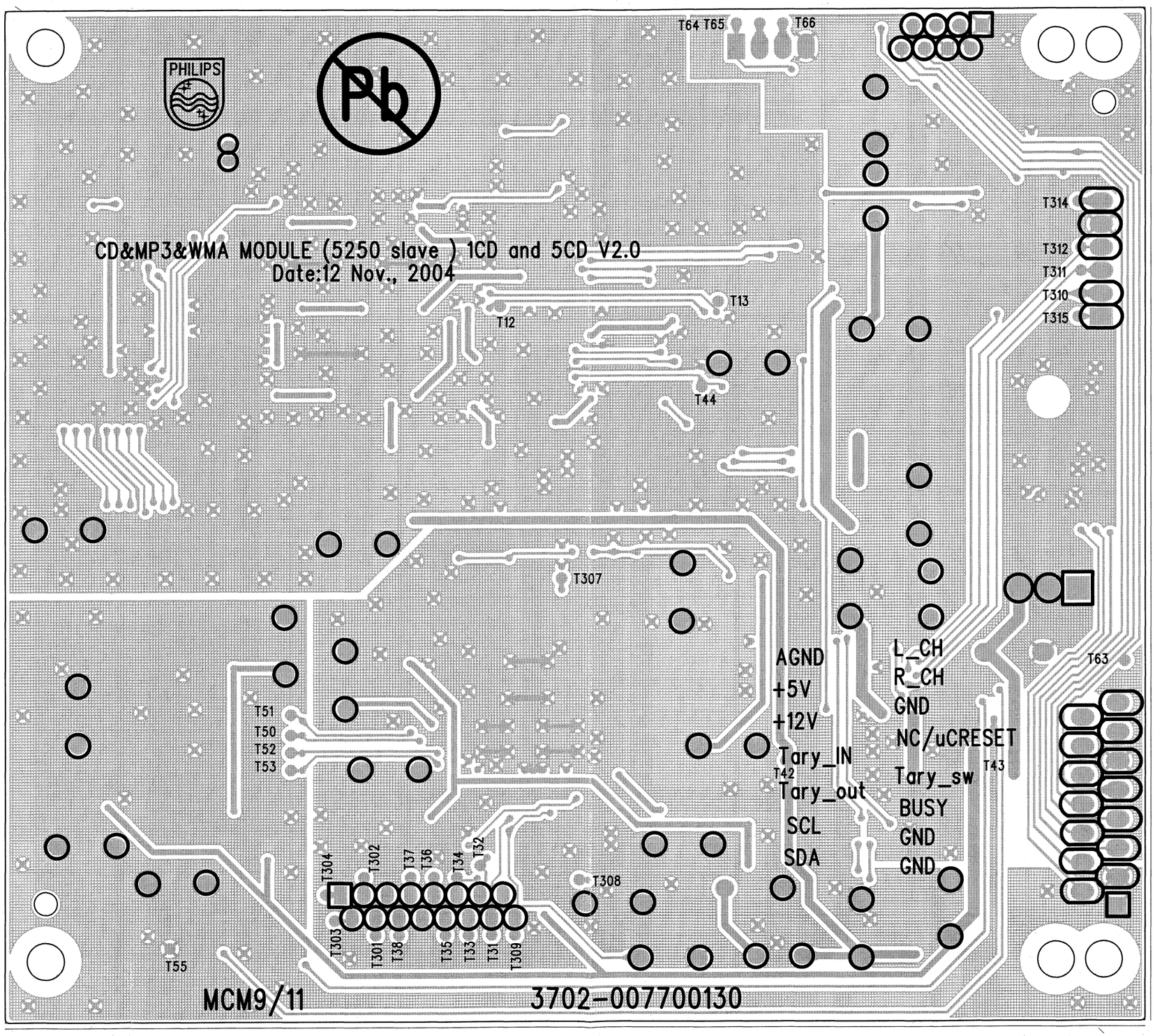

10-15

Exploded view *UNIVERSAL LOADER*

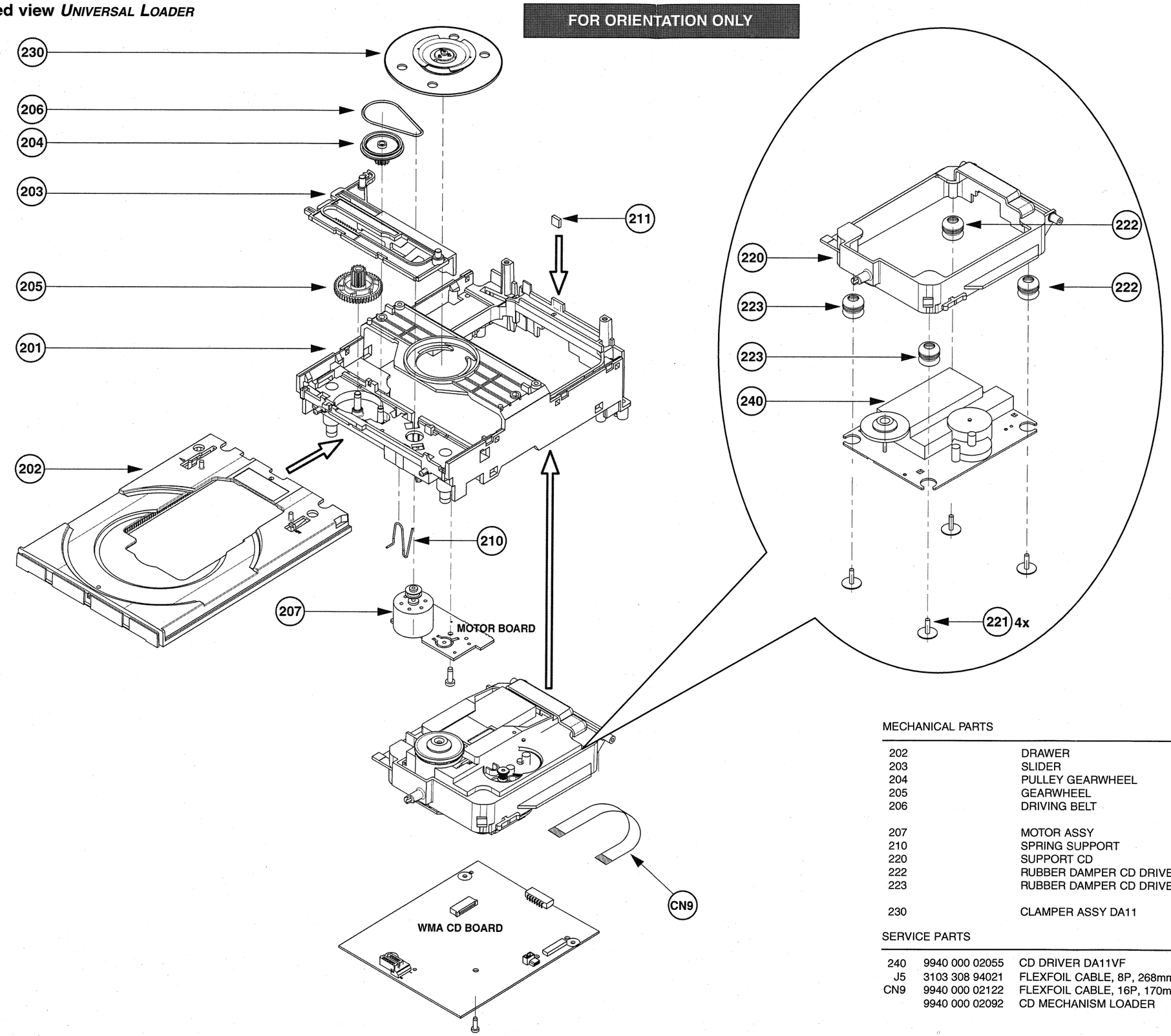

MECHANICAL PARTS

202	DRAWER
203	SLIDER
204	PULLEY GEARWHEEL
205	GEARWHEEL
206	DRIVING BELT
207	MOTOR ASSY
210	SPRING SUPPORT
220	SUPPORT CD
222	RUBBER DAMPER CD DRIVE, FRONT
223	RUBBER DAMPER CD DRIVE, FRONT
230	CLAMPER ASSY DA11

SERVICE PARTS

240	9940 000 02055	CD DRIVER DA11VF
J5	3103 308 94021	FLEXFOIL CABLE, 8P, 268mm
CN9	9940 000 02122	FLEXFOIL CABLE, 16P, 170mm
	9940 000 02092	CD MECHANISM LOADER

ELECTRICAL PARTSLIST Universal Loader

MOTOR BOARD

Only complete board available

9940 000 02111 MOTOR BOARD ASS'Y

WMA-MP3-CD BOARD

Only complete board available

9940 000 02078 WMA CD BOARD ASS'Y

COMBI & REGULATOR BOARDS

TABLE OF CONTENTS

Regulator Board
Brief Introduction of the Regulator Board 11-1
Component & Copper Side View 11-2
Circuit diagram 11-3

Combi Board
Component View seen from Copper Side 11-4
Copper Side View 11-5
Circuit diagram - Source Selector part 11-6
Circuit diagram - Amplifier part 11-7

Electrical parts list 11-8

Brief introduction of the Regulator Board

The regulator board provides the following:
a) 12V supply: +12V_A and +12V_M derived from the +A supply
b) 5,6V and 5V supply: +5V6 and 5V_VCD derived from the +A/2 supply

Technical Remarks

REGULATOR BOARD - COMPONENT SIDE VIEW

1171 A2	2408 A1	3404 A2	3417 A3	3430 A2	6401 A2	7405 A3	7419 A4	9411 A4
1400 B3	2409 A2	3405 A1	3418 A1	3431 B2	6402 A3	7406 A3	7420 A4	9412 A2
1401 A4	2410 A2	3406 A2	3419 B3	3432 B2	6404 A3	7407 A3	7421 A4	9413 B3
1402 B4	2411 B4	3407 A3	3420 B2	3433 B4	6405 A3	7408 A3	9172 A2	9414 A3
1403 A4	2412 B1	3409 A2	3421 B3	3434 B4	6406 B3	7409 B3	9174 A2	9415 A4
2400 A1	2413 A2	3410 A3	3422 A1	3435 B3	6407 B2	7410 A3	9401 A4	9416 B4
2402 A4	2415 A4	3411 B2	3423 A2	3436 A4	6409 A2	7411 A3	9402 A4	9417 A4
2403 A3	2416 B4	3412 A4	3424 A1	3437 A4	6412 B4	7412 B4	9403 A4	9419 A4
2404 A2	2417 B3	3413 A4	3425 A1	3438 A4	6413 B4	7413 A1	9404 A1	9420 A3
2405 A3	2418 A2	3414 A4	3426 B1	3439 A4	7401 A2	7414 B1	9405 A1	
2406 B2	2420 B3	3415 A3	3427 B2	3440 A4	7402 A2	7415 B1	9406 A4	
2407 B2	3403 A1	3416 A3	3428 B2	6400 A2	7403 A1	7417 A1	9410 A2	

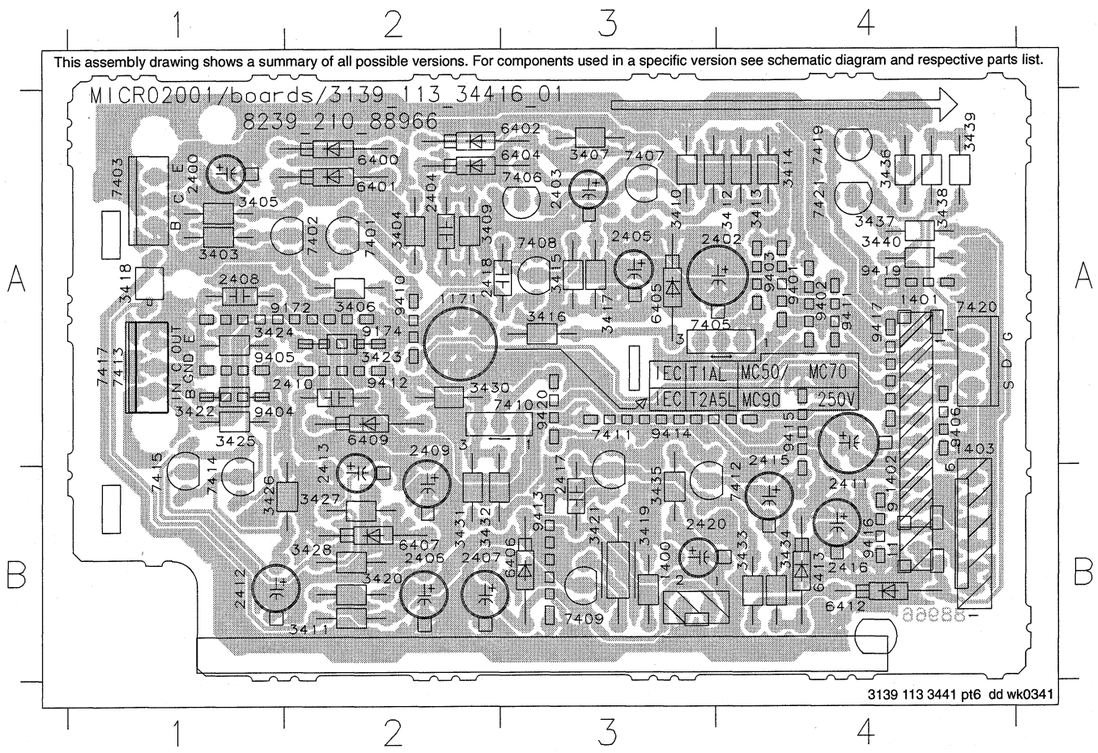

REGULATOR BOARD - COPPER SIDE VIEW

1171 A2	2409 B3	3405 A4	3418 A4	3431 B3	6402 A3	7406 A2	7420 A1	9412 A3
1400 B2	2410 A3	3406 A3	3419 B2	3432 B3	6404 A3	7407 A2	7421 A1	9413 B2
1401 A1	2411 A1	3407 A2	3420 B3	3433 B1	6405 A2	7408 A2	9172 A3	9414 A2
1402 A1	2412 B3	3409 A3	3421 B2	3434 B1	6406 B2	7409 B2	9174 A3	9415 A1
2400 A4	2413 A3	3410 A2	3422 A4	3435 B2	6407 B3	7410 A3	9401 A1	9416 B1
2402 A1	2415 B1	3411 B3	3423 A3	3436 A1	6409 A3	7411 B2	9402 A1	9417 A1
2403 A2	2416 B1	3412 A2	3424 A4	3437 A1	6412 B1	7412 B1	9403 A1	9419 A1
2404 A3	2417 B2	3413 A1	3425 A4	3438 A1	6413 B1	7413 A4	9404 A4	9420 A2
2405 A2	2418 A3	3414 A1	3426 B3	3439 A1	7401 A3	7414 B4	9405 A4	
2406 B3	2420 B2	3415 A2	3427 B3	3440 A1	7402 A3	7415 B4	9406 A1	
2407 B2	3403 A4	3416 A2	3428 B3	6400 A3	7403 A4	7417 A4	9410 A3	
2408 A4	3404 A3	3417 A2	3430 A3	6401 A3	7405 A1	7419 A1	9411 A1	

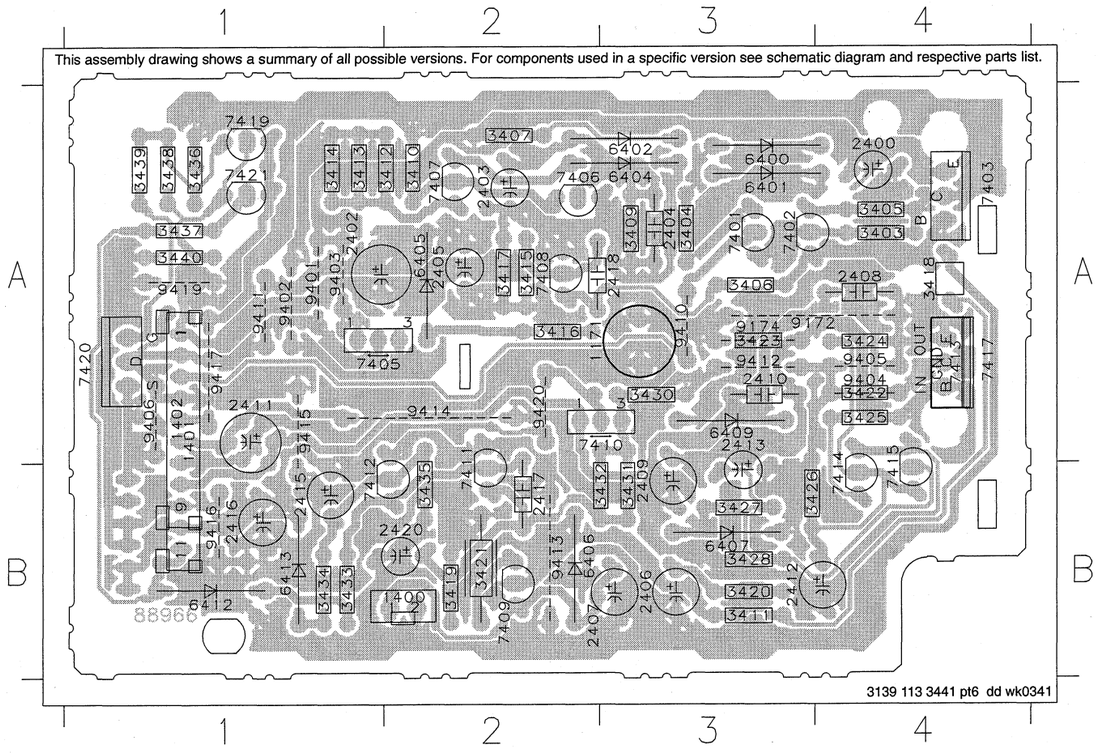

11-3

REGULATOR BOARD - CIRCUIT DIAGRAM

1171 C2	1403 E1	2404 C5	2408 D5	2412 F3	2417 D6	3404 B4	3409 C5	3413 B6	3417 C7	3421 A8	3425 E3	3430 D6	3434 E7	3438 F1	6401 C4	6406 B8	6413 D7	7405 A6	7409 B9	7413 D3	7419 F1	9174 D2	9406 E1
1400 B9	2400 B5	2405 B7	2409 E4	2413 E3	2418 B7	3405 A4	3410 B6	3414 B6	3418 B8	3422 D3	3426 E3	3431 D6	3435 E7	3439 F1	6402 B5	6407 E4	7401 B4	7406 C6	7410 D7	7414 F3	7420 E1	9401 A6	
1401 A1	2402 A7	2406 B8	2410 E5	2415 E7	2420 E6	3406 B5	3411 B8	3415 C7	3419 A8	3423 D2	3427 E4	3432 D6	3436 E2	3440 F1	6404 C6	6409 E5	7402 B4	7407 B6	7411 E6	7415 F3	7421 F2	9404 D3	
1402 A1	2403 C5	2407 B8	2411 C3	2416 D7	3403 A4	3407 B5	3412 B6	3416 B7	3420 B8	3424 E2	3428 F4	3433 D7	3437 F2	6400 B4	6405 B7	6412 D7	7403 A4	7408 B7	7412 E7	7417 D5	9172 D2	9405 D4	

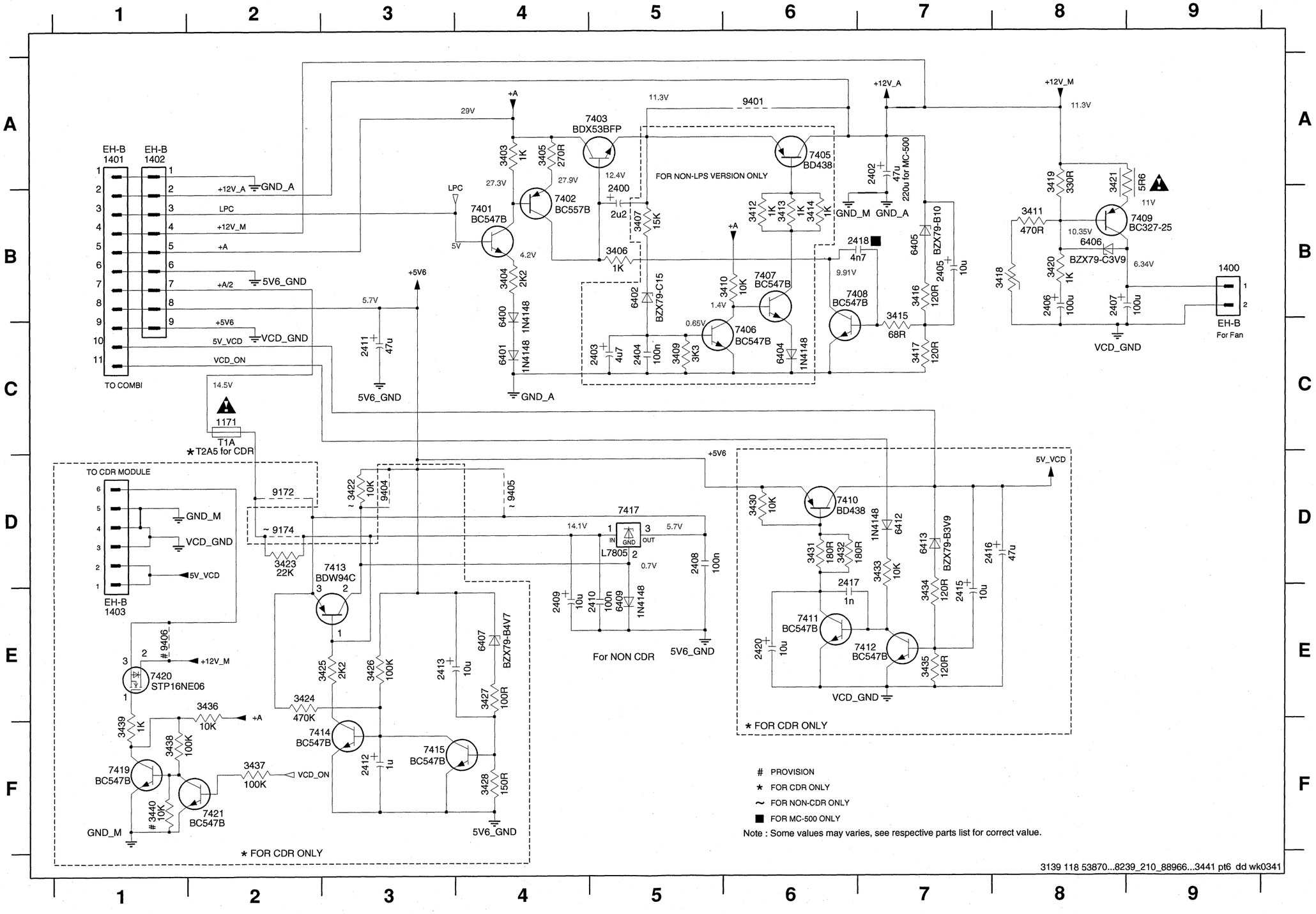

11-4

COMBI BOARD

0300 D6
1001 B9
1002 A7
1004 C9
1006 A9
1013 A4
1014 F1
1015 D1
1018 A6
1020 B6
1022 D1
1023 E1
1025 A3
1026 A2
1300 C7
1301 D7
1302 D5
1304 F2
1307 F9
1314 C6
1315 E3
1316 B5
2011 B4
2014 B8
2015 B4
2017 B3
2020 B8
2021 C1
2023 B4
2027 B5
2030 F3
2032 C1
2033 F1
2046 F1
2047 C2
2048 D2
2055 B8
2056 E2
2058 C1
2069 A8
2080 B5
2081 B5
2300 F6
2305 E7
2306 C7
2309 D7
2310 C7
2311 D8
2312 C8
2313 E7
2314 C7
2317 E9
2318 D9
2319 E9
2320 D9
2321 E9
2322 D9
2333 E5
2334 C6
2335 D7
2336 C6
2341 D4
2511 C2
2512 C4
2513 C3
2514 C4
2515 C2
2516 C4
2517 D3
2518 D4
2547 D4
2550 C2
2551 B3
2560 D3
2561 D3
2701 E2
2708 E2
2714 F2
2716 E1
3046 A6
3067 D1
3300 E4
3309 D8
3310 C9
3311 E8
3312 D9
3315 E6
3340 F8
3353 E6
3366 F5
3713 E2
5001 A9
5300 D8
5301 E8
5302 C8
5303 E8
5700 F2
6000 F3
6001 F3
6002 B2
6003 A6
6005 C2
6300 F9
6301 E8
6302 F9
6303 E8
6304 D6
6306 F6
6307 F7
6308 C6
6311 D6
6315 F7
6323 F6
6324 F6
6325 D5
6326 F3
6327 F3
6328 F5
6330 F4
6331 D5
6332 F6
7301 E8
7302 C8
7304 D8
7309 F8
9201 B8
9202 B8
9203 A7
9204 E2
9205 B7
9206 B7
9207 A8
9208 A7
9209 B6
9210 B6
9211 B6
9212 B6
9213 B6
9214 A6
9215 A7
9216 B5
9217 A4
9218 B4
9219 B4
9220 B4
9221 B4
9222 B3
9223 A3
9224 E3
9225 A3
9226 A7
9228 A2
9229 A2
9230 A2
9232 A2
9233 B2
9234 B1
9235 C1
9236 E5
9237 C2
9238 B2
9239 B2
9240 B2
9241 C2
9243 C2
9244 C3
9245 C4
9246 C4
9247 C5
9248 A2
9249 A2
9250 B6
9251 C6
9252 C6
9254 C7
9255 C7
9256 C7
9257 C6
9258 D7
9259 D6
9260 C5
9261 D6
9262 D6
9264 D6
9265 D7
9266 D7
9267 E7
9268 E7
9269 E7
9270 E7
9271 E7
9272 E6
9273 E5
9274 E5
9275 E4
9276 E5
9277 E5
9278 E4
9279 E4
9280 F3
9281 E4
9284 D3
9285 D3
9286 D3
9287 E3
9288 E3
9289 E3
9290 E3
9291 E3
9293 F3
9294 E3
9295 D3
9296 D3
9297 D3
9298 E2
9299 D2
9300 D2
9301 E2
9302 E1
9303 D1
9304 E1
9305 F2
9306 F3
9307 F2
9308 E2
9311 E2
9312 B7

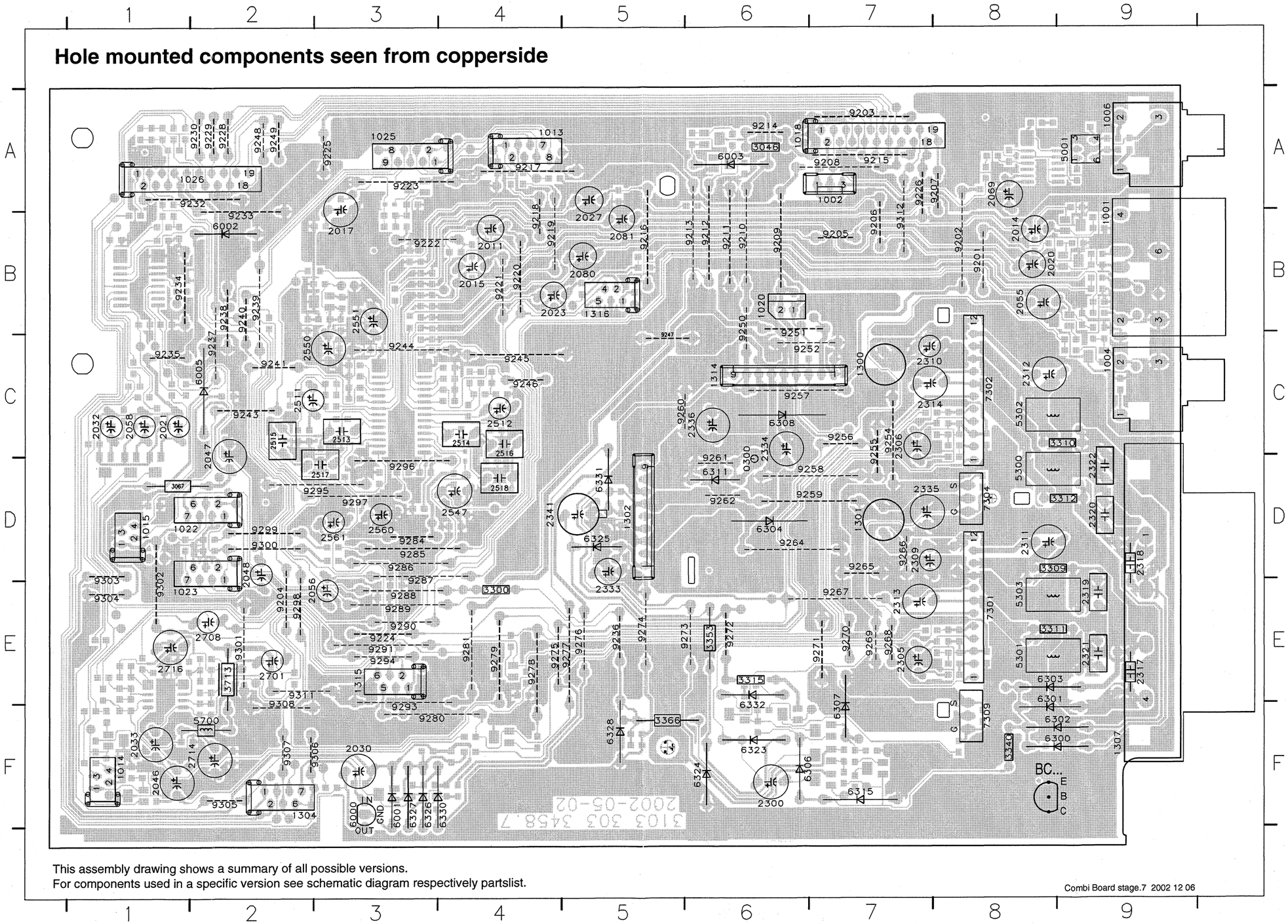

11-5

COMBI BOARD

2000 D3
2003 A4
2006 A4
2025 B9
2028 B3
2029 F3
2031 B9
2036 B9
2037 B9
2038 F1
2042 B9
2043 A9
2045 F1
2051 C9
2057 B9
2060 B3
2061 B1
2062 B1
2063 A9
2064 A9
2065 A9
2066 A9
2067 A9
2068 A8
2070 B1
2301 E8
2302 C8
2303 E8
2304 C8
2307 E8
2308 C8
2315 C8
2316 E8
2324 F6
2339 F4
2340 F5
2501 C3
2502 C4
2503 C3
2504 C4
2505 C3
2506 C4
2507 C3
2508 C4
2509 C3
2510 C4
2521 C2
2522 C4
2523 C2
2524 C4
2525 C3
2530 C4
2544 D3
2545 D3
2546 B2
2549 B2
2552 C3
2563 B3
2564 B3
2565 B3
2700 E1
2702 E2
2706 F2
2707 F1
2709 E1
2713 E1
2715 F1
3011 B3
3012 B3
3014 C1
3015 F2
3016 C6
3017 A4
3018 A4
3021 B9
3022 B5
3024 B5
3026 B9
3027 A6
3028 C1
3029 A5
3031 B1
3032 F1
3033 F1
3034 B1
3035 C1
3036 B4
3038 B9
3039 B8
3041 D3
3042 F1
3043 D2
3048 A6
3049 B9
3050 D3
3051 B8
3052 D2
3053 A6
3054 C1
3057 F1
3059 C1
3060 C1
3062 A6
3064 B4
3065 F1
3066 F1
3071 C1
3073 C9
3077 C9
3079 C1
3081 C9
3082 C9
3083 B3
3084 A3
3085 A3
3087 B4
3088 B3
3089 A3
3091 B4
3094 A1
3095 A1
3096 E2
3097 E1
3098 A9
3099 A8
3100 A8
3101 A8
3102 A8
3105 E2
3106 E1
3107 B1
3110 B5
3111 B5
3301 E8
3302 C8
3303 E8
3304 D8
3305 F4
3306 E4
3307 E8
3308 C8
3314 E6
3318 F6
3323 F7
3326 F8
3327 F8
3328 D8
3329 F7
3331 E6
3336 E7
3337 C7
3341 F8
3342 F7
3359 F3
3360 F4
3361 F3
3362 F3
3363 F3
3364 F7
3365 F7
3367 F5
3372 F3
3373 F3
3377 D5
3378 D5
3379 F4
3380 E4
3503 C2
3505 C3
3506 C4
3507 C3
3508 D4
3509 C2
3510 D4
3511 C3
3512 C4
3513 C2
3516 C4
3540 D3
3541 D3
3543 B3
3544 C3
3561 D4
3562 D3
3565 C4
3700 E2
3701 E2
3704 E2
3705 F2
3706 E1
3707 F1
3709 E1
3711 E1
3712 E1
3714 E1
3715 B1
3716 A1
3717 A1
3718 A1
4201 B3
4202 B3
4203 B3
4204 B3
4205 B3
4206 B3
4207 B3
4208 C3
4209 C3
4210 B1
4211 B1
4212 C2
4214 D1
4215 E1
4216 F1
4217 F2
4219 E3
4220 E3
4221 D4
4222 D4
4223 D3
4224 D3
4225 E4
4226 E4
4227 D1
4228 F4
4229 A1
4230 A1
4231 B2
4232 E3
4233 C1
4234 C1
4235 C1
4501 C3
4502 C4
4503 F3
4504 A1
5005 C3
5006 D4
5262 B3
7000 D1
7003 B9
7004 F1
7005 B1
7006 A6
7007 B9
7008 D1
7009 F1
7010 A6
7011 C9
7012 B9
7013 D1
7015 A3
7016 A8
7300 F7
7307 F6
7308 F7
7310 F6
7313 F7
7325 F3
7326 F7
7328 F4
7329 E4
7505 B3
7506 C3
7700 E1

Copperside view

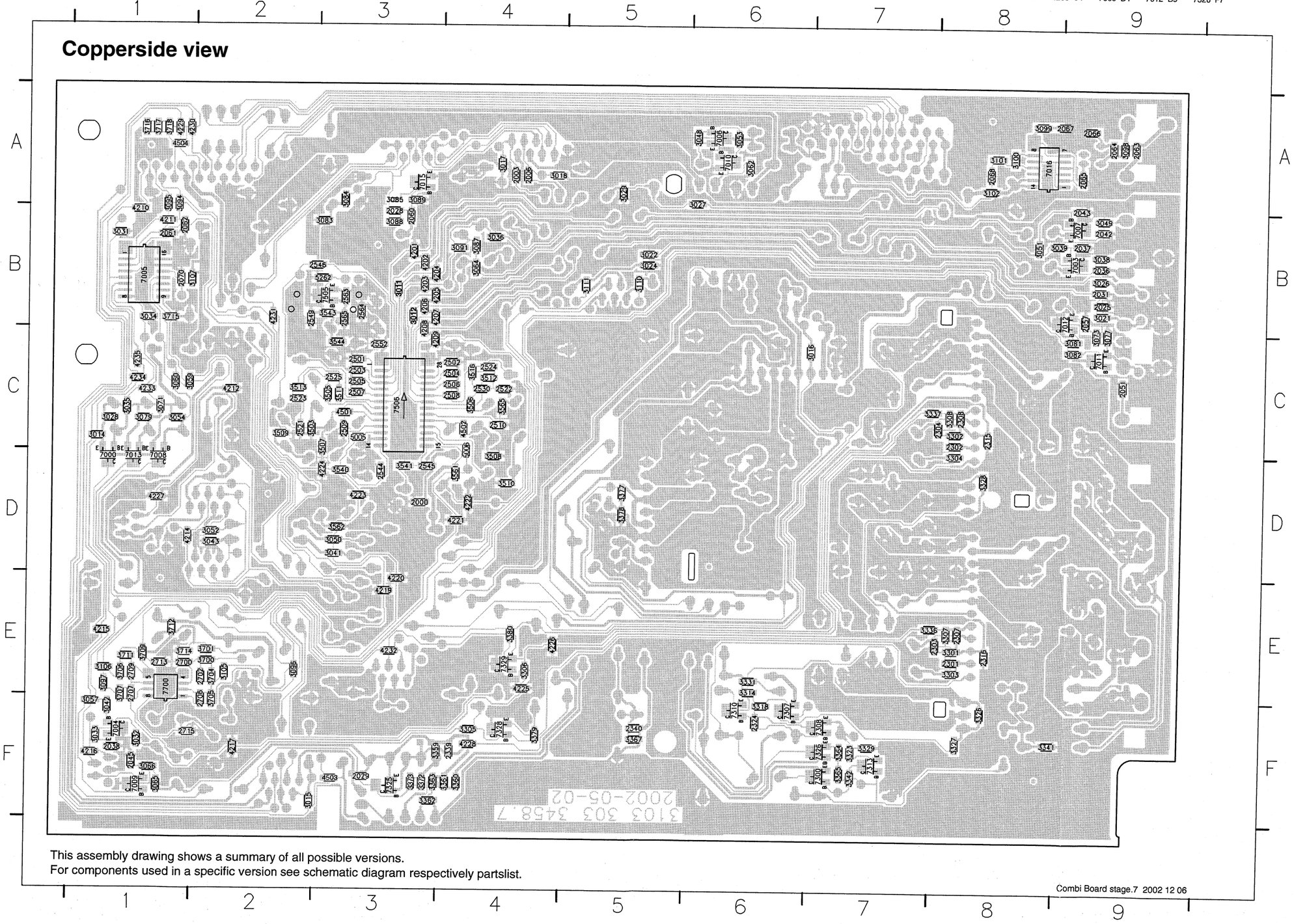

This assembly drawing shows a summary of all possible versions.
For components used in a specific version see schematic diagram respectively partslist.

Combi Board stage.7 2002 12 06

11-6

COMBI CIRCUIT - SOURCE SELECTOR PART

1001-A A1	1025 G15	2015 B3	2031 A2	2064 A13	2502 G6	2512 H8	2524 H8	2552 D6	3021 A2	3043 A2	3084 B9	3102 A13	3503 D8	3516 H8	3718 E14	6326 G13	7016-D B12
1001-B A9	1026 E15	2017 B9	2036 A8	2065 A12	2503 G5	2513 D9	2525 D7	2560 D11	3022 A3	3049 A8	3085 B10	3110 A3	3505 D8	3540 H10	4501 D9	6327 G13	7016-E B11
1002 A15	1304 C15	2020 A8	2037 A7	2066 B13	2504 G6	2514 H9	2530 H7	2561 D11	3024 A3	3050 B3	3087 B9	3111 A3	3506 H8	3541 H11	4502 H9	6331 G12	7016-F A11
1006 A15	1314 B15	2021 A6	2042 A8	2067 C13	2505 G5	2515 D10	2544 H10	2563 D5	3026 A2	3051 B7	3088 B10	3359 G13	3507 D9	3543 D5	4503 D13	7003 A7	7325 G14
1013 D1	1316 A4	2023 A3	2043 B7	2068 C11	2506 G6	2516 H9	2545 H11	2564 D6	3027 A3	3052 B3	3089 C10	3360 F13	3508 H9	3544 D5	4504 D14	7007 A7	7505 C5
1015 D1	2000 E2	2025 A2	2047 C1	2069 A13	2507 G5	2517 D10	2546 F6	2565 D5	3029 A3	3054 A6	3091 C9	3361 G13	3509 D10	3561 D10	5001 A13	7008 A6	7506 E7
1018 F1	2003 E3	2027 A3	2048 C3	2080 F3	2508 G6	2518 H10	2547 E6	3015 D14	3036 B8	3060 A6	3098 A14	3362 F13	3510 H10	3562 D11	5262 D5	7015 B10	
1020 H13	2006 E3	2028 B10	2056 B3	2081 F3	2509 E8	2521 D8	2549 D4	3016 D14	3038 A8	3064 B8	3099 B13	3363 G12	3511 D7	3565 H8	6000 D13	7016-A A12	
1022 B1	2011 B3	2029 D13	2060 B9	2339 G13	2510 H9	2522 H7	2550 D5	3017 E3	3039 A7	3067 C2	3100 A11	3377 G12	3512 H7	3716 D14	6001 D13	7016-B A12	
1023 B2	2014 A8	2030 D13	2063 A14	2501 G4	2511 D8	2523 D8	2551 D6	3018 E3	3041 B3	3083 B9	3101 B11	3378 G12	3513 D8	3717 E14	6005 C2	7016-C B12	

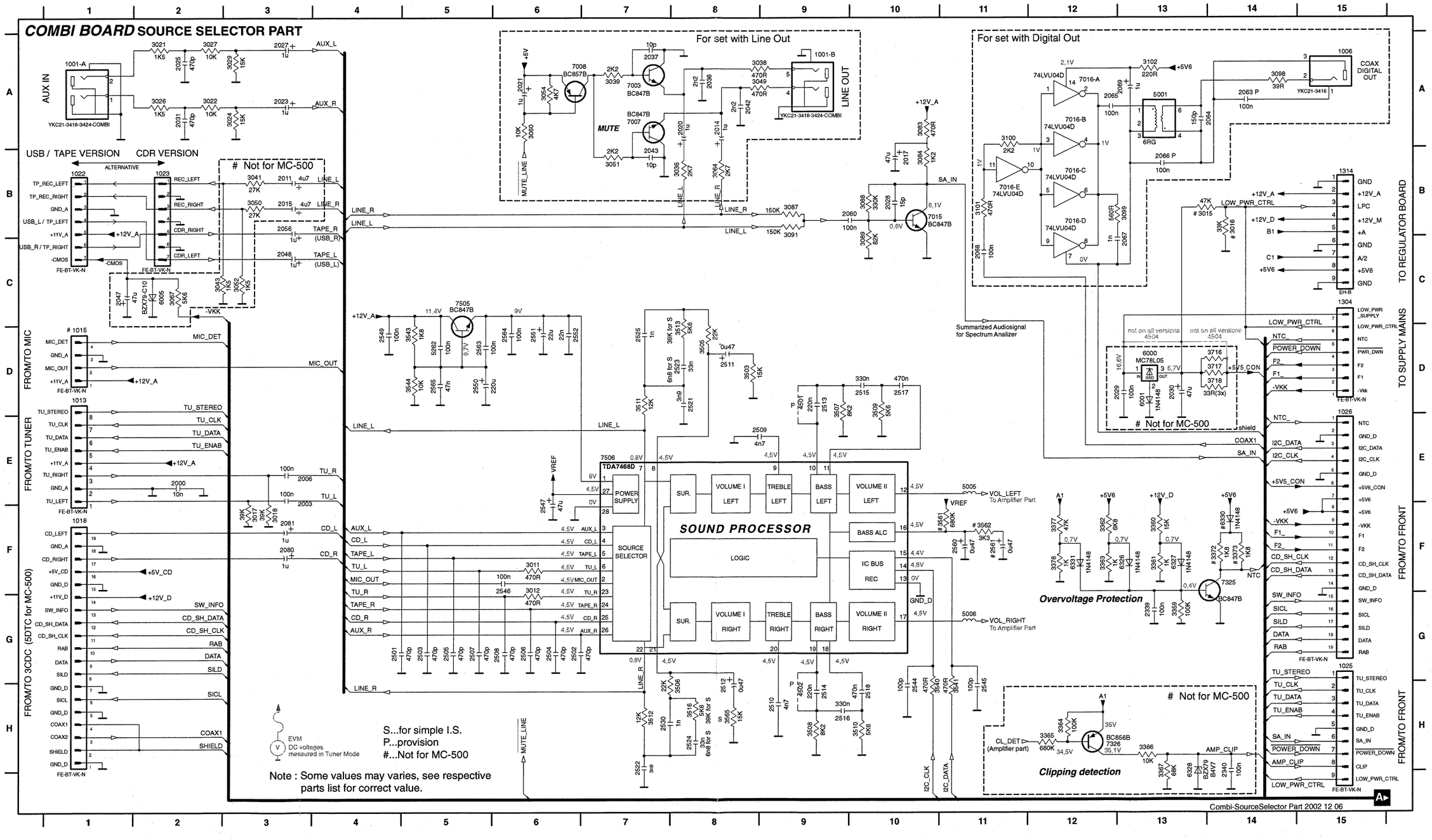

11-7

COMBI CIRCUIT - AMPLIFIER PART

0300 C10	1307-A F14	2045 H2	2061 I13	2303 A7	2309 A9	2315 B9	2321 F13	2336 B2	2706 F3	2715 D4	3033 H4	3053 I8	3071 G4	3094 I13	3107 H14	3305 C6	3311 B10
1004 F1	1307-B E14	2046 C5	2062 I13	2304 E7	2310 E9	2316 G9	2322 F12	2340 C14	2707 C3	2716 D1	3034 H10	3057 H4	3073 F2	3095 I13	3300 F7	3306 F7	3312 F10
1014 G1	1315 B1	2051 F1	2070 I14	2305 A7	2311 A10	2317 F13	2324 B14	2341 A3	2708 D1	3014 G2	3035 I5	3059 I10	3077 F2	3096 E4	3301 A7	3307 C8	3314 A14
1300 E9	2032 I5	2055 F4	2300 D9	2306 E7	2312 E10	2318 F12	2333 F7	2700 E3	2709 C3	3028 I5	3042 H3	3062 I9	3079 G4	3097 D4	3302 E7	3308 G8	3315 A12
1301 A9	2033 E5	2057 F2	2301 A7	2307 C8	2313 B10	2319 F13	2334 B1	2701 E1	2713 D3	3031 H10	3046 I7	3065 H5	3081 G3	3105 C2	3303 A8	3309 A10	3318 A13
1302 A1	2038 H2	2058 G4	2302 E7	2308 G8	2314 F10	2320 F12	2335 B2	2702 E3	2714 E3	3032 H4	3048 I8	3066 H5	3082 G3	3106 C2	3304 E7	3310 E10	3323 C13
																	3326 B12
																	3327 A12
																	3328 B12
																	3329 C13
																	3331 A13
																	3336 B7
																	3337 F8
																	3340 D13
																	3341 E13
																	3342 D11
																	3353 C7
																	3364 C12
																	3365 D12
																	3366 C13
																	3367 C14
																	3379 C6
																	3380 G7
																	3700 E2
																	3701 E2
																	3704 E2
																	3705 F3
																	3706 D2
																	3707 C3
																	3709 D2
																	3711 D2
																	3712 D2
																	3713 D4
																	3714 D2
																	3715 H11
																	5300 F10
																	5301 B10
																	5302 E10
																	5303 A10
																	5700 D3
																	6002 H14
																	6003 I8
																	6300 E12
																	6301 E13
																	6302 E12
																	6303 E13
																	6304 A11
																	6306 B14
																	6307 B13
																	6308 B11
																	6311 B9
																	6315 D14
																	6323 D7
																	6324 D7
																	6325 A2
																	6328 C13
																	6332 A13
																	7000 H4
																	7004 H2
																	7005 G12
																	7006 I8
																	7009 H3
																	7010 I9
																	7011 G2
																	7012 G3
																	7013 G4
																	7300 D9
																	7301 A8
																	7302 E8
																	7304 A13
																	7307 A12
																	7308 B14
																	7309 B12
																	7310 B13
																	7313 D12
																	7326 C12
																	7328 C6
																	7329 G7
																	7700-A E3
																	7700-B D3
																	9214 I7
																	9261 C9

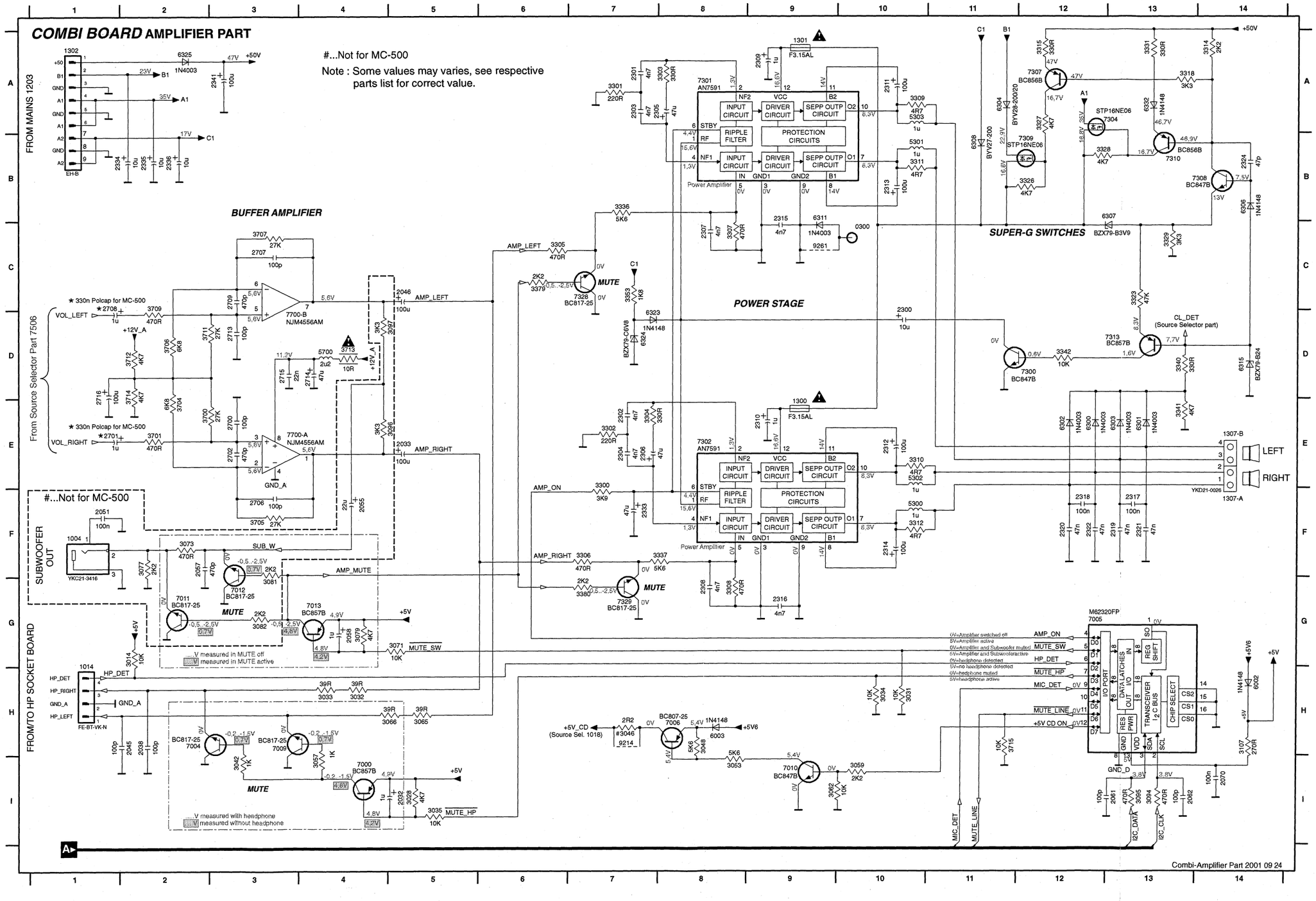

ELECTRICAL PARTS - REGULATOR BOARD

1171	⚠	4822 071 51002	FUSE 19372(1A)
3418		4822 117 12063	NTC DC 5W 10K 5%
3421	⚠	4822 052 10568	5R60 5% 0,33W
7403		9322 139 23687	TRA POW BDX53BFP
7417		4822 209 31841	IC L7805CP

Note: **Only these parts mentioned in the list are normal service parts.**

ELECTRICAL PARTS - COMBI BOARD

1001		4822 265 20553	SOCKET CINCH 2P - AUX IN
1300	⚠	4822 252 11225	FUSE 3,15A
1301	⚠	4822 252 11225	FUSE 3,15A
1307		9940 000 02095	SPK TERMINAL TC08-412-0
3713	⚠	4822 052 10109	10R00 5% 0,33W
7005		4822 209 17345	IC M62320FP
7301		9322 153 02682	IC AN7591
7302		9322 153 02682	IC AN7591
7304		4822 130 11578	FET POW STP16NE06
7309		4822 130 11336	FET POW STP16NE06
7506		9322 150 74668	IC SM TDA7468D (ST00) R
7700		4822 209 31378	IC NJM4556MB
		9940 000 02119	FFC CABLE 15P L=150MM WHITE
		9940 000 02121	FFC CABLE 4P L=340MM

Note: **Only these parts mentioned in the list are normal service parts.**

12-1

SET MECHANICAL EXPLODED VIEW

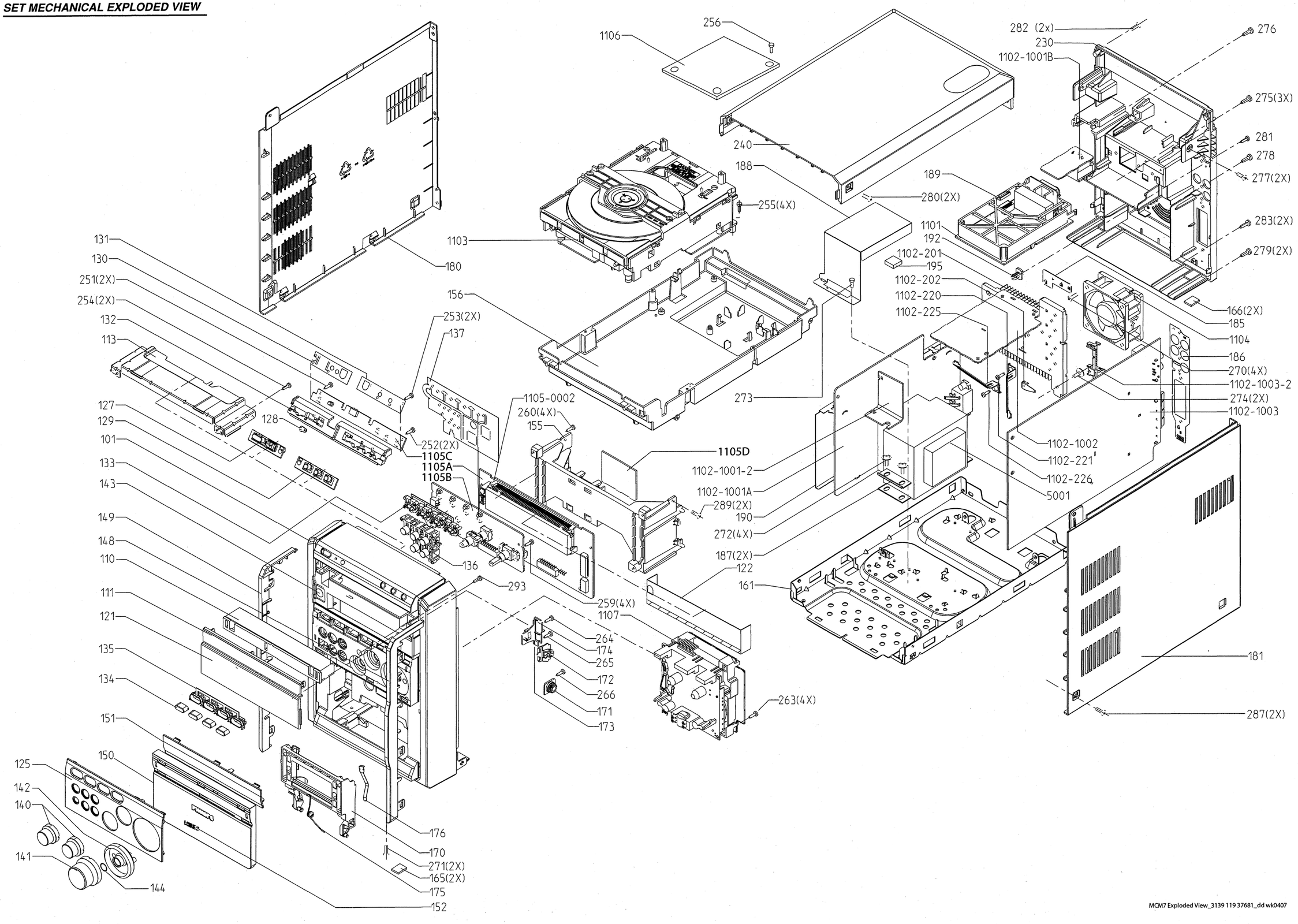

MCM7 Exploded View_3139 119 37681_dd wk0407

MECHANICAL & ACCESSORIES

P001	9940 000 02087	COVER CD TRAY PRE ASS'Y
Includes:		
0110	9940 000 02089	BRACKET-CD DOOR
0111	9940 000 02088	DOOR-CD
P002	9940 000 02091	COVER CASSETTE PRE ASS'Y
Includes:		
0121		LENS DISPLAY
0127		BUTTON-STANDBY POWER
0129		BUTTON SET RDS/NEWS
0150		COVER CASSETTE
0151		PANEL CASSETTE
0170	9940 000 02132	DOOR-CASSETTE
P004	9940 000 02086	CABINET FRONT ASS'Y
Includes:		
0101		CABINET FRONT
0125		PANEL CONTROL
0133		BUTTON-SOURCE
0134		CAP SOURCE
0136		BUTTON SET FUNCTION
0165	9940 000 02094	FOOT RUBBER 4MM
0171	9940 000 01664	DAMPER GEAR ASSEMBLY
0175	3139 111 01390	SPRING TORSION LEFT
0176	4822 492 42787	SPRING CASSETTE
0140	9940 000 02136	KNOB-BASS/TREBLE
0141	9940 000 02135	KNOB-VOLUME
0144	4822 492 51374	RING
0166	9940 000 02094	RUBBER-FOOT 4MM
0173	9940 000 02093	SPRING-COMPRESSION
0180	9940 000 02083	PANEL-LEFT
0181	9940 000 02084	PANEL-RIGHT
0230	9940 000 02085	CABINET-REAR
0240	9940 000 02133	PANEL-TOP
1103	9940 000 02092	CD MECHANISM LOADER
1107	3139 118 78740	TAPE DECK CRL 4438

3139 238 06511	REMOTE CONTROL
9940 000 02081	SPEAKER BOX 6OHM 50W
2422 549 45067	ANT AM LOOP LAN-006 B
⚠ 9940 000 02082	AC CORD VDE 2C L=1.5M /22
⚠ 9940 000 02178	AC CORD BSI /25
9940 000 02078	WMA CD ASS'Y
9940 000 02079	CASS. BOARD ASS'Y
9940 000 02101	RDS BOARD ASS'Y
9940 000 02111	MOTOR BOARD ASS'Y
9940 000 02131	TUNER BOARD ASS'Y

Note: Only these parts mentioned in the list are normal service parts.

SCREW LISTS - MAIN UNIT

251	D2 x 8
252	D2 x 8
253	D2 x 8
254	D2 x 8
255	D3 x 20
256	D3 x 8
259	M3 x 12
260	D3 x 10
263	D3 x 12
264	D3 x 12
265	M3 x 12
266	M3 x 12
270	D3 x 35
271	M3 x 6
272	M3 x 10
273	M3 x 6
274	M3 x 10
275	D3 x 10
276	D3 x 10
277	D3 x 10
278	D3 x 10
279	M3 x 10
280	M3 x 10
281	D3 x 16
282	D3 x 12
283	D3 x 10
287	M3 x 10
289	D3 x 10
293	D2 x 8